The Timken Company
4500 Mt Pleasant St. NW
N. Canton, OH 44720
Phone: (234) 262-3000
E-Mail: CustomerCAD@timken.com • **Web site:** www.timken.com

Timken Part Number VCJ1 1/2, Four-Bolt Flanged Units Eccentric Locking Collar (Includes Industrial and Standard Series)



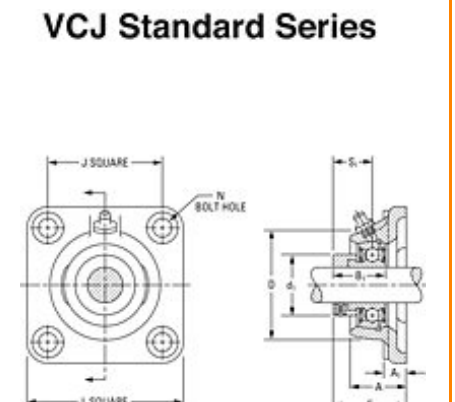

Specifications | Dimensions | Basic Load Ratings

Specifications

Bore Size d	1 1/2 in 38.1 mm
Bearing Number	GRA108RRB
Dimension D	3.874 in 98.4 mm
Dimension E	2.295 in 58.3 mm
Inside Ring Outside Diameter	2.291 in 58.2 mm
Series	Standard
Weight	4.80 lb 2.175 Kg

Seal Type	Molded Shroud

Dimensions

Total Length L	130.2 mm 5.126 in
Total Width A	1.500 in 38.1 mm
Bolt Hole Spacing J	101.6 mm 4.000 in
Bolt Hole Size N	12 mm 0.472 in
Flange Thickness A1	14.3 mm 0.563 in
Center of Bearing from Housing End A2	25.8 mm 1.016 in
Inside Ring Width B	N/A
Bolt Size	M12
Center of Bearing from Bearing End S	11.2 mm 0.441 in

Basic Load Ratings

Static Load Rating	4400 lbf 19600 N
Dynamic Load Rating	36000 lbf 8150 N

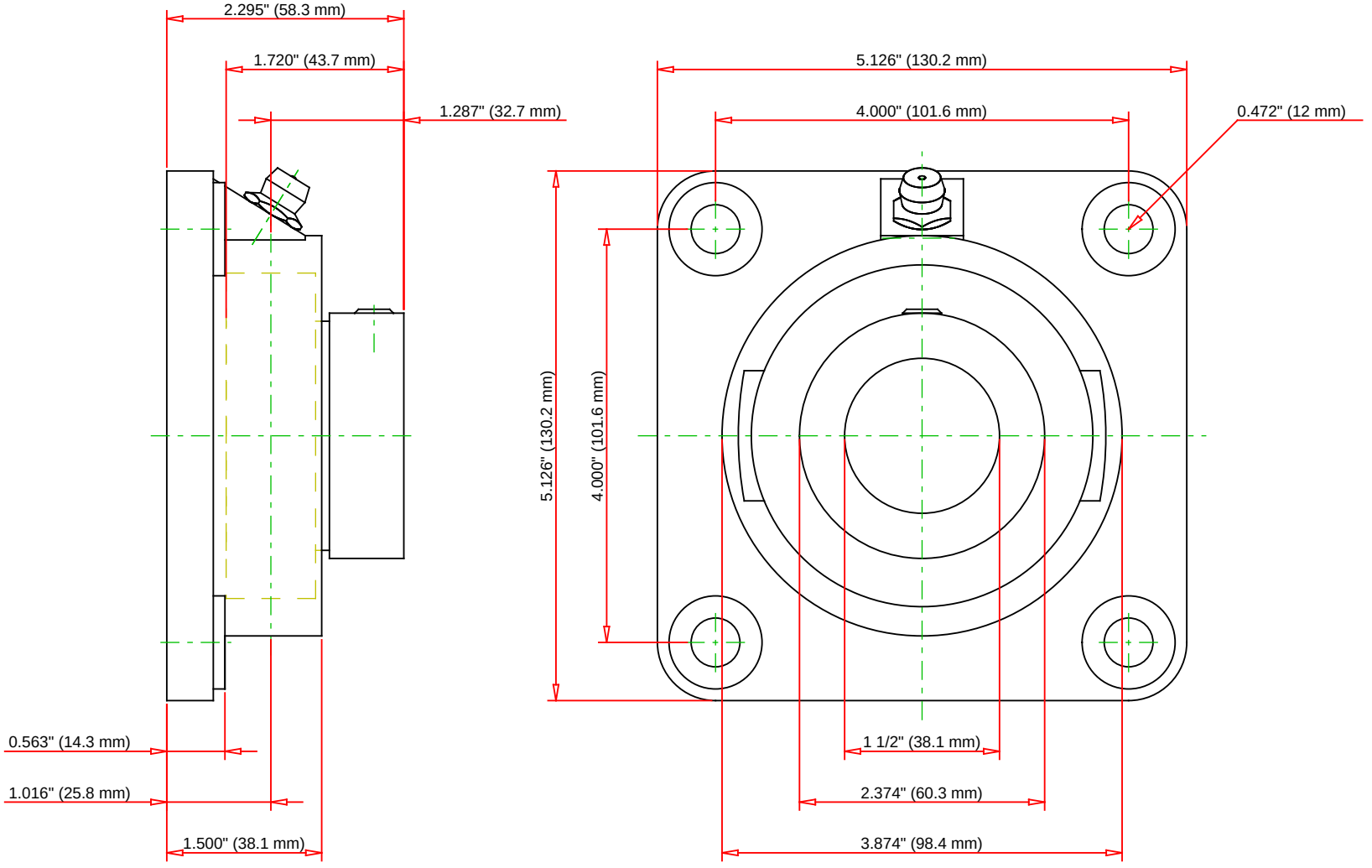

Bearing Number	GRA108RRB			
Load Ratings - C_r	8150	lbf	36000	N
Load Ratings - C_{0r}	4400	lbf	19600	N
Weight	4.8	lb	2.175	kg

TIMKEN

THE TIMKEN COMPANY
NORTH CANTON, OHIO USA

VCJ1 1/2

Four-Bolt Flanged Units Eccentric Locking Collar
(Includes Industrial and Standard Series)

Every reasonable effort has been made to ensure the accuracy of the information contained in this writing, but no liability is accepted for errors, omissions or for any other reason.

FOR DISCUSSION ONLY