The Timken Company
4500 Mt Pleasant St. NW
N. Canton, OH 44720
Phone: (234) 262-3000
E-Mail: CustomerCAD@timken.com • **Web site:** www.timken.com

Part Number TCJT 1 1/4, Fafnir® Two-Bolt Flanged Units Eccentric Locking Collar



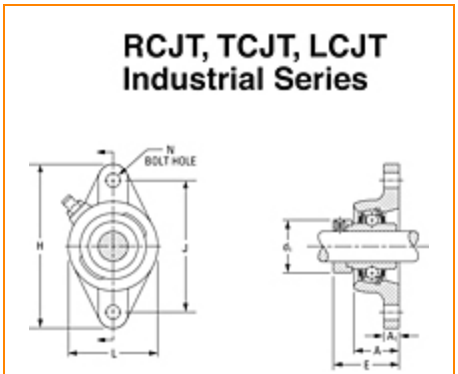

Specifications | Dimensions | Basic Load Ratings

Specifications

Shaft Size d	1 1/4 in 31.8 mm
Bearing Type	Ball Bearing
Bearing Number	G1104KPPB2
Dimension E	2.106 in 53.5 mm
Inside Ring Outside Diameter	2.110 in 53.6 mm
e	0.083 in 2.106 mm
Series	Industrial
Weight	3.183 lb 1.444 Kg

Seal Type	Tri-Ply Seal
Housing Construction	Two-Bolt Flange
Alternate Part Name	TCJT1 1/4

Dimensions

Housing Width A	31.8 mm 1.252 in
Total Length H	155.6 mm 6.126 in
Total Height L	92.1 mm 3.626 in
Bolt Hole Spacing J	130.2 mm 5.126 in
Bolt Hole Size N	13.1 mm 0.516 in
Flange Thickness A1	11.9 mm 0.469 in
Center of Bearing from Housing End A2	0.834 mm 0.033 in
Inside Ring Width B	0 mm 0.000 in

Basic Load Ratings

Static Load Rating	3440 lbf 15300 N
Dynamic Load Rating	6400 lbf 28500 N

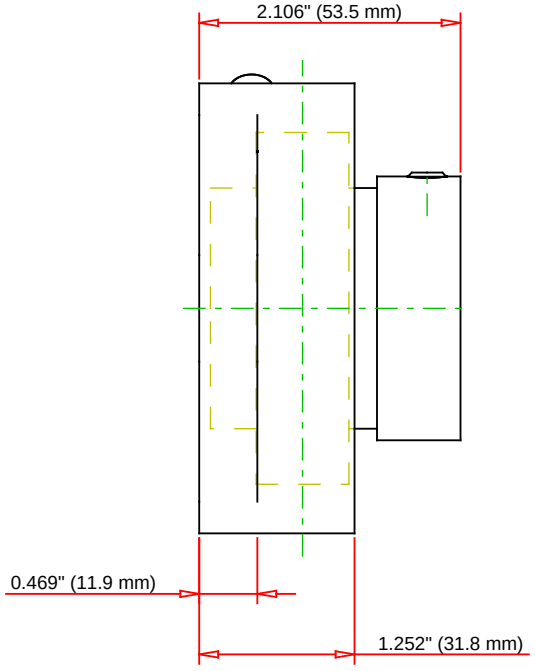

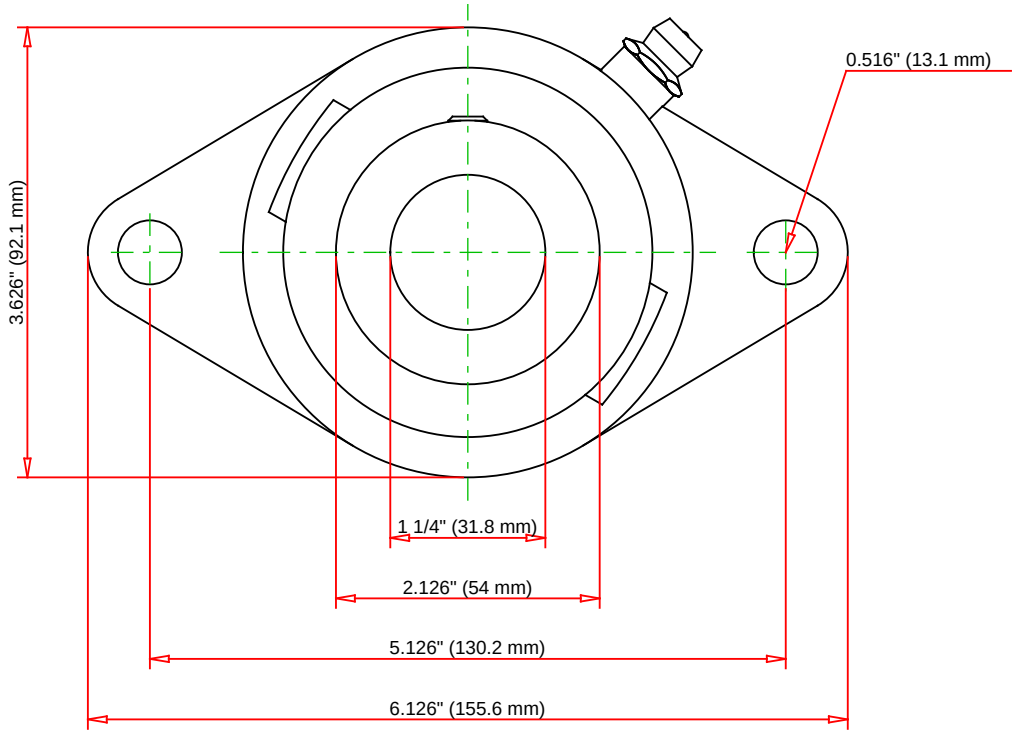

Bearing Number	G1104KPPB2			
Load Ratings - C_r	6400	lbf	28500	N
Load Ratings - C_{0r}	3440	lbf	15300	N
Weight	3.183	lb	1.444	kg

TIMKEN

THE TIMKEN COMPANY
NORTH CANTON, OHIO USA

TCJT 1 1/4

Fafnir® Two-Bolt Flanged Units Eccentric Locking Collar

Every reasonable effort has been made to ensure the accuracy of the information contained in this writing, but no liability is accepted for errors, omissions or for any other reason.

FOR DISCUSSION ONLY