The Timken Company
4500 Mt Pleasant St. NW
N. Canton, OH 44720
Phone: (234) 262-3000
E-Mail: CustomerCAD@timken.com • **Web site:** www.timken.com

Timken Part Number VAK 1 1/8, Pillow Block Units Eccentric Locking Collar (Includes Industrial and Standard Series)



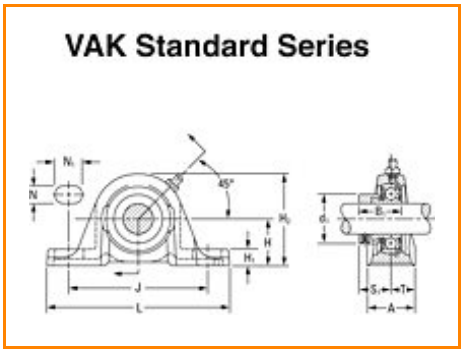

Specifications | Dimensions | Basic Load Ratings

Specifications

Bore Size d	1 1/8 in 28.6 mm
Bearing Number	GRA102RRB
Inside Ring Outside Diameter	0.626 in 15.9 mm
Dimension B1	1.406 in 35.7 mm
Dimension T	0.783 in 19.9 mm
Series	Standard
Weight	2.723 lb 1.235 Kg
Seal Type	Molded Shroud

Dimensions

Shaft Height H	39.69 mm 1.563 in
Total Length L	157.2 mm 6.189 in
Total Width A	1.563 in 39.7 mm
Bolt Hole Spacing J	117.5 mm 4.626 in
Bolt Hole Width N	14.3 mm 0.563 in
Bolt Hole Length N1	23.8 mm 0.937 in
Base Height H1	13.5 mm 0.531 in
Total Height H2	80.2 mm 3.157 in
Dimension L1	52.4 mm 2.063 in
Inside Ring Width B	N/A
Center of Bearing from End S	8.7 mm 0.343 in

Basic Load Ratings

Static Load Rating	2500 lbf 11100 N
Dynamic Load Rating	4900 lbf 21800 N

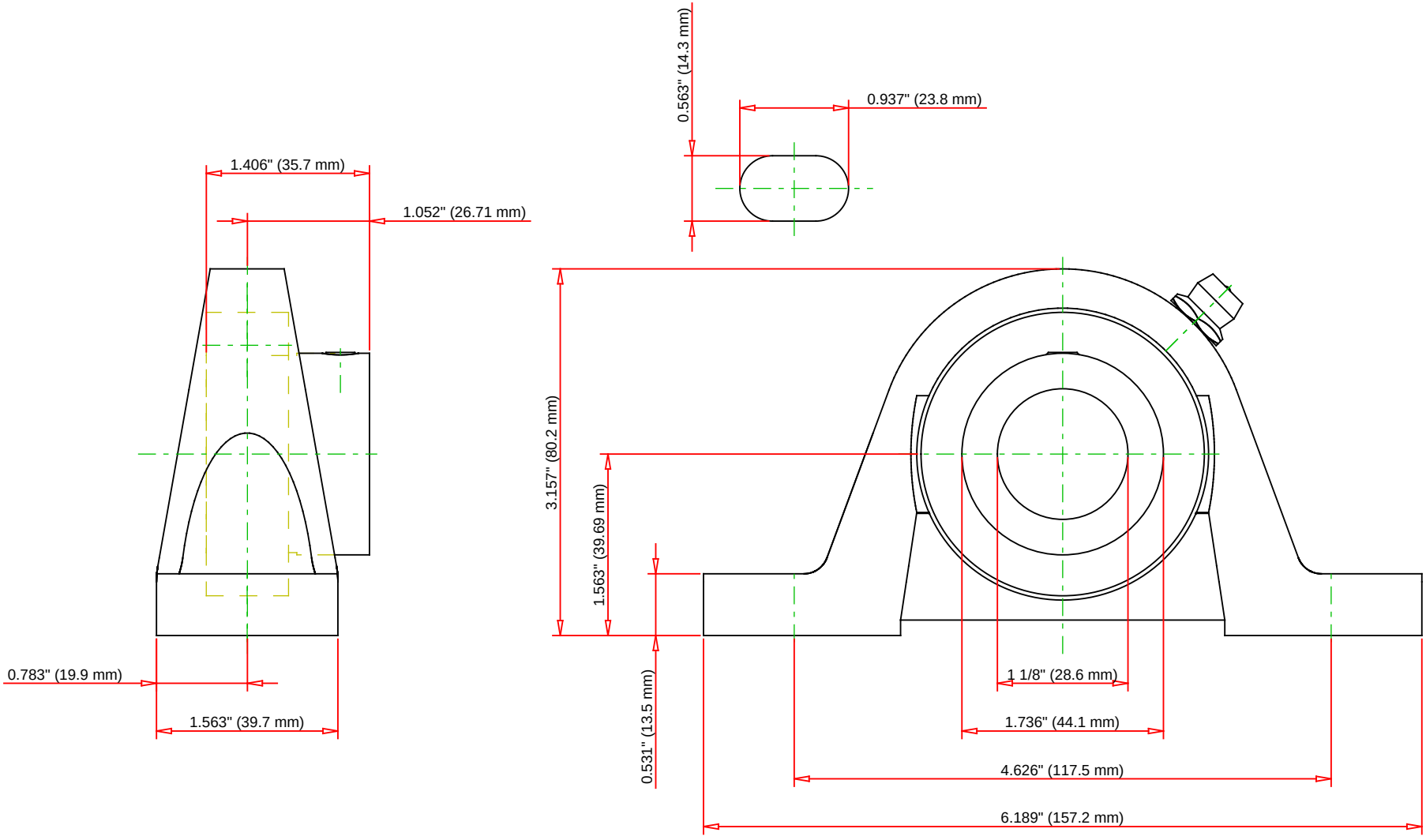

Bearing Number	GRA102RRB				
Load Ratings - C_r	4900	lbf	21800	N	
Load Ratings - C_{0r}	2500	lbf	11100	N	
Weight	2.723	lb	1.235	kg	

TIMKEN

THE TIMKEN COMPANY
NORTH CANTON, OHIO USA

VAK 1 1/8

Pillow Block Units Eccentric Locking Collar
(Includes Industrial and Standard Series)

Every reasonable effort has been made to ensure the accuracy of the information contained in this writing, but no liability is accepted for errors, omissions or for any other reason.

FOR DISCUSSION ONLY