The Timken Company
4500 Mt Pleasant St. NW
N. Canton, OH 44720
Phone: (234) 262-3000
E-Mail: CustomerCAD@timken.com • **Web site:** www.timken.com

Timken Part Number JM205149A - JM205110, Tapered Roller Bearings - TS (Tapered Single) Metric

This is the most basic and most widely used type of tapered roller bearing. It consists of two main separable parts: the cone (inner ring) assembly and the cup (outer ring). It is typically mounted in opposing pairs on a shaft.



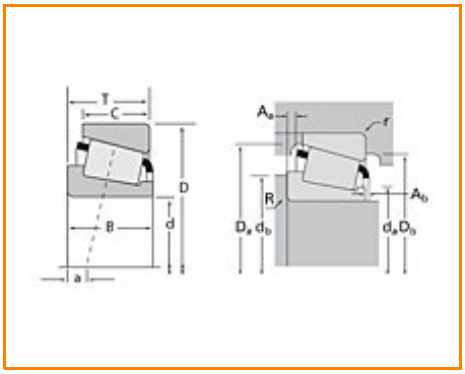

Specifications | Dimensions | Abutment and Fillet Dimensions | Basic Load Ratings | Factors

Specifications

Series	M205100
Cone Part Number	JM205149A
Cup Part Number	JM205110
Design Units	METRIC
Bearing Weight	0.700 Kg 1.60 lb
Cage Type	Stamped Steel

Dimensions

d - Bore	50.000 mm 1.9685 in
D - Cup Outer Diameter	90.000 mm 3.5433 in
B - Cone Width	28.000 mm 1.1024 in
C - Cup Width	23.000 mm 0.9055 in
T - Bearing Width	28.000 mm 1.1024 in

Abutment and Fillet Dimensions

R - Cone Backface "To Clear" Radius[1]	5.080 mm 0.2 in
r - Cup Backface "To Clear" Radius[2]	2.54 mm 0.1 in
da - Cone Frontface Backing Diameter	56.90 mm 2.24 in
db - Cone Backface Backing Diameter	67.06 mm 2.64 in
Da - Cup Frontface Backing Diameter	85.10 mm 3.39 in
Db - Cup Backface Backing Diameter	80.01 mm 3.15 in
Ab - Cage-Cone Frontface Clearance	2.8 mm 0.11 in
Aa - Cage-Cone Backface Clearance	0.3 mm 0.01 in
a - Effective Center Location[3]	-7.60 mm -0.3 in

Basic Load Ratings

C90 - Dynamic Radial Rating (90 million revolutions)[4]	32100 N 7210 lbf
C1 - Dynamic Radial Rating (1 million revolutions)[5]	124000 N 27800 lbf
C0 - Static Radial Rating	154000 N 34600 lbf
C_{a90} - Dynamic Thrust Rating (90 million revolutions)[6]	18100 N 4060 lbf

Factors

K - Factor[7]	1.78
e - ISO Factor[8]	0.33
Y - ISO Factor[9]	1.82
G1 - Heat Generation Factor (Roller-Raceway)	48.2
G2 - Heat Generation Factor (Rib-Roller End)	14.1
Cg - Geometry Factor	0.0885

[1] These maximum fillet radii will be cleared by the bearing corners.

[2] These maximum fillet radii will be cleared by the bearing corners.

[3] Negative value indicates effective center inside cone backface.

[4] Based on 90 x 10^6 revolutions L_{10} life, for The Timken Company life calculation method. C_{90} and C_{a90} are radial and thrust values.

[5] Based on 1 x 10^6 revolutions L_{10} life, for the ISO life calculation method.

[6] Based on 90 x 10^6 revolutions L_{10} life, for The Timken Company life calculation method. C_{90} and C_{a90} are radial and thrust values for a single-row, $C_{90(2)}$ is the two-row radial value.

[7] These factors apply for both inch and metric calculations. Consult your Timken representative for instruction on use.

[8] These factors apply for both inch and metric calculations. Consult your Timken representative for instruction

on use.

[9] These factors apply for both inch and metric calculations. Consult your Timken representative for instruction on use.

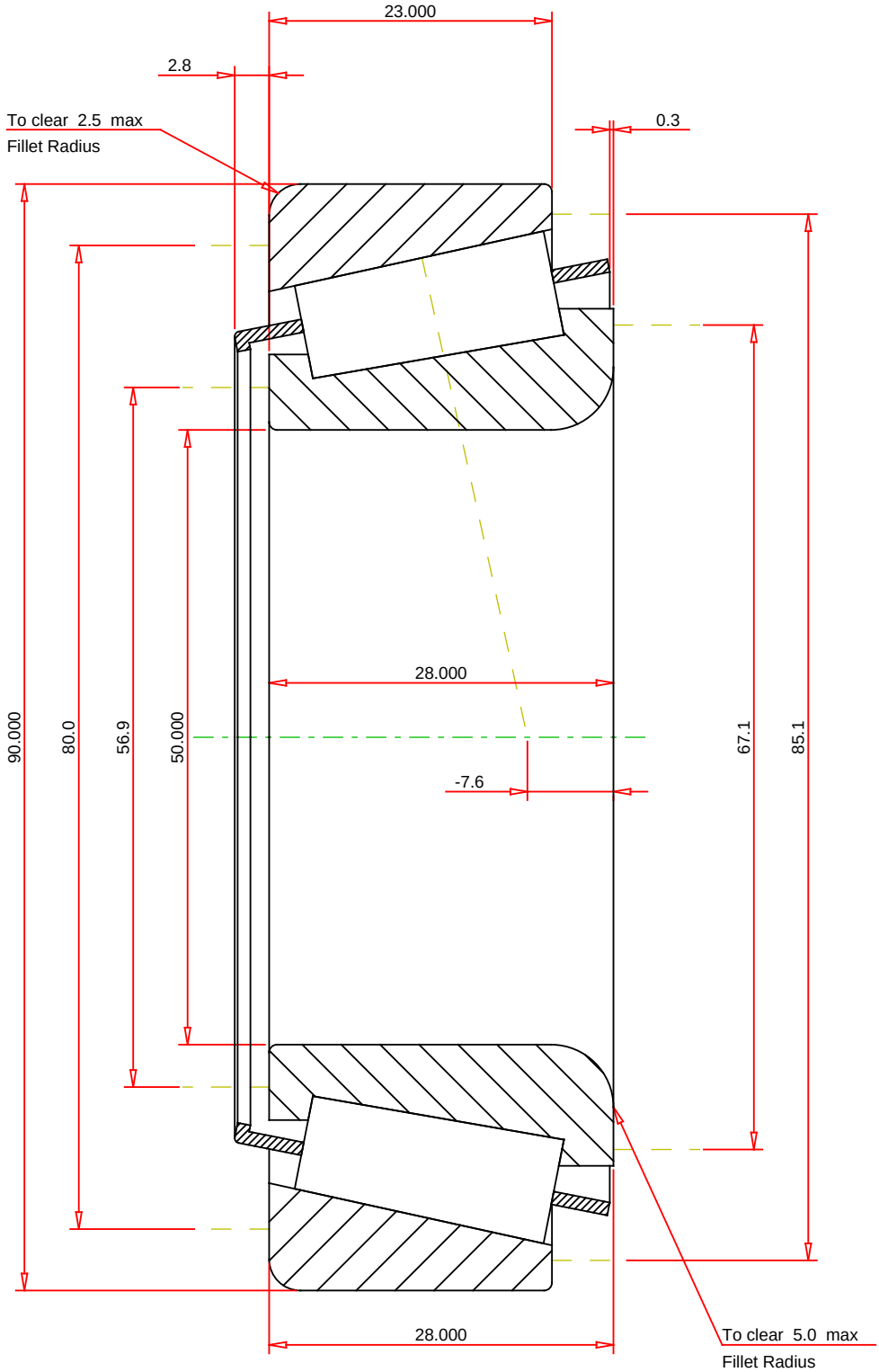

METRIC UNITS

ISO Factor - e	0.33	
ISO Factor - Y	1.82	
Bearing Weight	0.7	kg
Number of Rollers Per Row	18	
Effective Center Location	-7.6	mm

TIMKEN®

THE TIMKEN COMPANY
NORTH CANTON, OHIO USA

JM205149A - JM205110
TS BEARING ASSEMBLY

K Factor	1.78	
Dynamic Radial Rating - C90	32100	N
Dynamic Thrust Rating - Ca90	18100	N
Static Radial Rating - C0	154000	N
Dynamic Radial Rating - C1	124000	N

Every reasonable effort has been made to ensure the accuracy of the information contained in this writing, but no liability is accepted for errors, omissions or for any other reason.

FOR DISCUSSION ONLY