The Timken Company
4500 Mt Pleasant St. NW
N. Canton, OH 44720
Phone: (234) 262-3000
E-Mail: CustomerCAD@timken.com • **Web site:** www.timken.com

Timken Part Number 34301 - 34478, Tapered Roller Bearings - TS (Tapered Single) Imperial

This is the most basic and most widely used type of tapered roller bearing. It consists of two main separable parts: the cone (inner ring) assembly and the cup (outer ring). It is typically mounted in opposing pairs on a shaft.



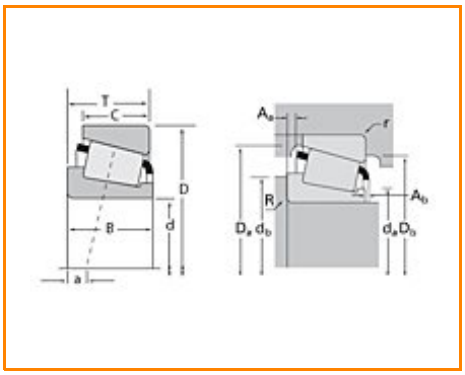

Specifications | Dimensions | Abutment and Fillet Dimensions | Basic Load Ratings | Factors

Specifications

Series	34000
Cone Part Number	34301
Cup Part Number	34478
Design Units	Imperial
Bearing Weight	0.900 Kg 2.10 lb
Cage Type	Stamped Steel

Dimensions

d - Bore	76.2 mm 3 in

D - Cup Outer Diameter	121.442 mm 4.7812 in
B - Cone Width	23.012 mm 0.9060 in
C - Cup Width	17.463 mm 0.6875 in
T - Bearing Width	24.608 mm 0.9688 in

Abutment and Fillet Dimensions

R - Cone Backface "To Clear" Radius[1]	3.560 mm 0.14 in
r - Cup Backface "To Clear" Radius[2]	2.03 mm 0.08 in
da - Cone Frontface Backing Diameter	83.06 mm 4.02 in
db - Cone Backface Backing Diameter	88.90 mm 3.50 in
Da - Cup Frontface Backing Diameter	116.10 mm 4.60 in
Db - Cup Backface Backing Diameter	109.98 mm 4.33 in
Ab - Cage-Cone Frontface Clearance	2.5 mm 0.1 in
Aa - Cage-Cone Backface Clearance	2.3 mm 0.09 in
a - Effective Center Location[3]	1.50 mm 0.06 in

Basic Load Ratings

C90 - Dynamic Radial Rating (90 million revolutions)[4]	26500 N 5960 lbf
C1 - Dynamic Radial Rating (1 million revolutions)[5]	102000 N 23000 lbf
C0 - Static Radial Rating	136000 N 30600 lbf
C_{a90} - Dynamic Thrust Rating (90 million revolutions)[6]	20500 N 4600 lbf

Factors

K - Factor[7]	1.3
e - ISO Factor[8]	0.45
Y - ISO Factor[9]	1.33
G1 - Heat Generation Factor (Roller-Raceway)	69.3
G2 - Heat Generation Factor (Rib-Roller End)	27
Cg - Geometry Factor	0.109

[1] These maximum fillet radii will be cleared by the bearing corners.
[2] These maximum fillet radii will be cleared by the bearing corners.
[3] Negative value indicates effective center inside cone backface.
[4] Based on 90 x 10^6 revolutions L_{10} life, for The Timken Company life calculation method. C_{90} and C_{a90} are radial and thrust values.
[5] Based on 1 x 10^6 revolutions L_{10} life, for the ISO life calculation method.
[6] Based on 90 x 10^6 revolutions L_{10} life, for The Timken Company life calculation method. C_{90} and C_{a90} are radial and thrust values for a single-row, $C_{90(2)}$ is the two-row radial value.
[7] These factors apply for both inch and metric calculations. Consult your Timken representative for instruction on use.
[8] These factors apply for both inch and metric calculations. Consult your Timken representative for instruction on use.
[9] These factors apply for both inch and metric calculations. Consult your Timken representative for instruction on use.

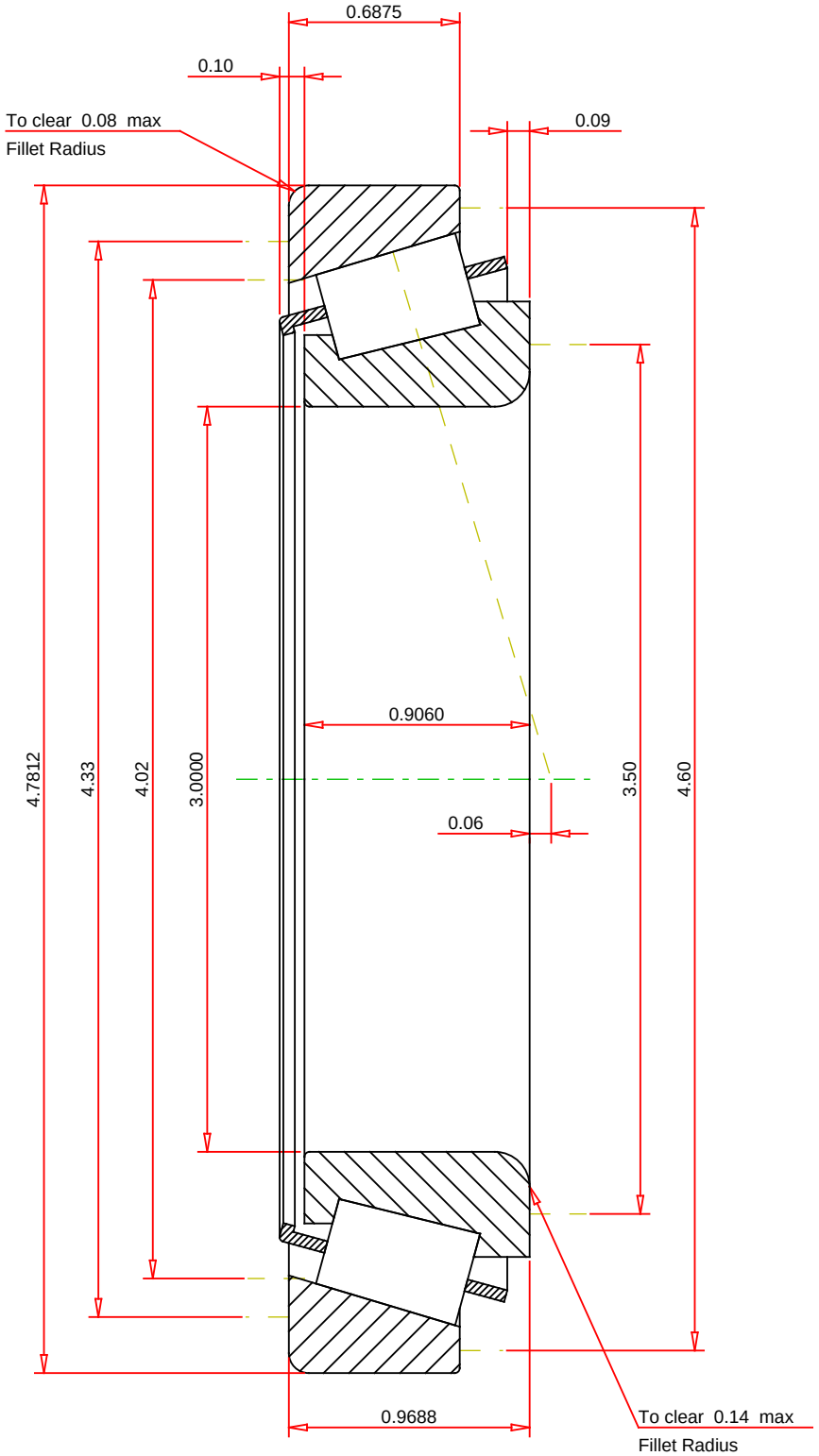

IMPERIAL UNITS

ISO Factor - e	0.45	
ISO Factor - Y	1.33	
Bearing Weight	2.1	lb
Number of Rollers Per Row	24	
Effective Center Location	0.06	inch

TIMKEN

THE TIMKEN COMPANY
NORTH CANTON, OHIO USA

34301 - 34478
TS BEARING ASSEMBLY

K Factor	1.3	
Dynamic Radial Rating - C90	26500	lbf
Dynamic Thrust Rating - Ca90	20500	lbf
Static Radial Rating - C0	136000	lbf
Dynamic Radial Rating - C1	102000	lbf

Every reasonable effort has been made to ensure the accuracy of the information contained in this writing, but no liability is accepted for errors, omissions or for any other reason.

FOR DISCUSSION ONLY