The Timken Company
4500 Mt Pleasant St. NW
N. Canton, OH 44720
Phone: (234) 262-3000
E-Mail: CustomerCAD@timken.com • **Web site:** www.timken.com

Part Number YCJ 35 SGT, Fafnir® Four-Bolt Flanged Units Setscrew Locking



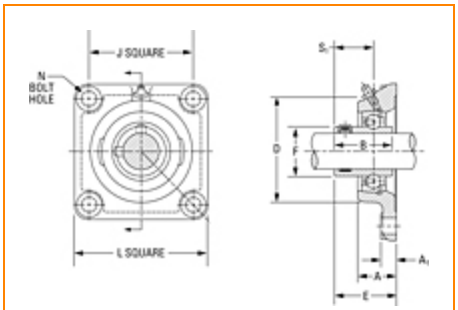

Specifications | Dimensions | Basic Load Ratings

Specifications

Shaft Size d	1.378 in 35 mm
Bearing Number	GYE35KRRB SGT
Dimension D	3.500 in 88.9 mm
Dimension E	1.927 in 48.95 mm
Inside Ring Outside Diameter	1.843 in 46.81 mm
Series	Industrial
Weight	3.94 lb 1.79 Kg
Seal Type	Shroud Seal

Housing Construction	Four-Bolt Square Flange
Alternate Part Name	YCJ35 SGT

Dimensions

Total Length L	117.5 mm 4.626 in
Housing Width A	1.252 in 31.8 mm
Bolt Hole Size N	12 mm 0.472 in
Flange Thickness A1	13.5 mm 0.531 in
Center of Bearing from Housing End A2	20.75 mm 0.817 in
Inside Ring Width B	N/A
Total Height	117.5 mm 4.626 in
Bolt Size	M12
Center of Bearing from Bearing End S	17 mm 0.669 in

Basic Load Ratings

Static Load Rating	3440 lbf 15300 N
Dynamic Load Rating	6400 lbf 28500 N

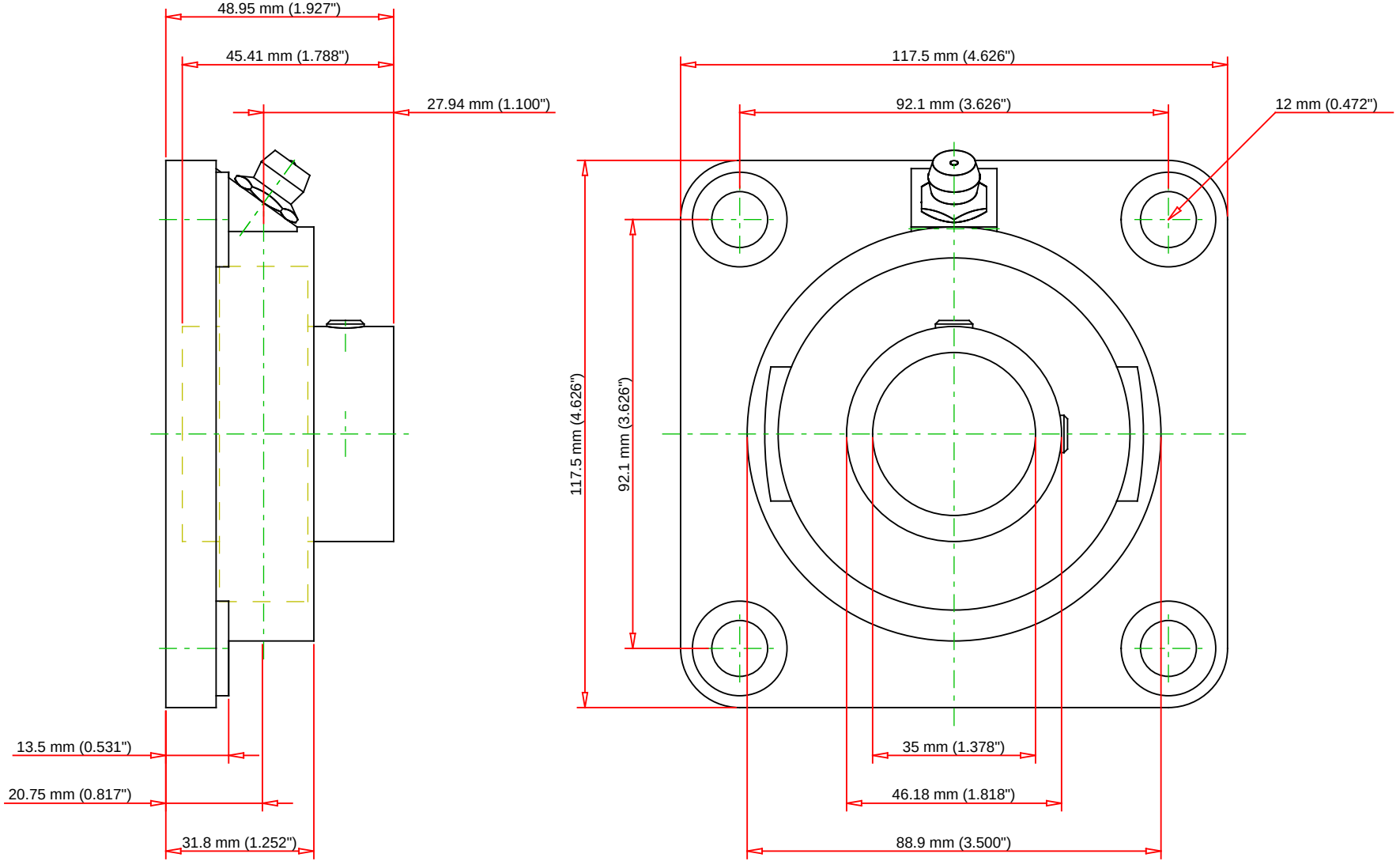

Bearing Number	GYE35KRRB SGT				
Load Ratings - C_r	6400	lbf	28500	N	
Load Ratings - C_{0r}	3400	lbf	15100	N	
Weight	0	lb	0	kg	
Bolt Size	M8x1.25				

TIMKEN

THE TIMKEN COMPANY
NORTH CANTON, OHIO USA

YCJ 35 SGT

Fafnir® Four-Bolt Flanged Units Setscrew Locking

Every reasonable effort has been made to ensure the accuracy of the information contained in this writing, but no liability is accepted for errors, omissions or for any other reason.

FOR DISCUSSION ONLY