The Timken Company
4500 Mt Pleasant St. NW
N. Canton, OH 44720
Phone: (234) 262-3000
E-Mail: CustomerCAD@timken.com • **Web site:** www.timken.com

Part Number VCJT 15/16, Fafnir® Two-Bolt Flanged Units Eccentric Locking Collar



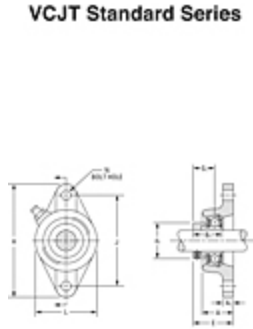

Specifications | Dimensions | Basic Load Ratings

Specifications

Shaft Size d	15/16 in 23.8 mm
Bearing Type	Ball Bearing
Bearing Number	GRA015RRB
Dimension E	1.701 in 43.2 mm
Inside Ring Outside Diameter	0.941 in 23.9 mm
Series	Standard
Weight	1.631 lb 0.74 Kg
Seal Type	Molded Shroud
Housing Construction	Two-Bolt Flange

Alternate Part Name	VCJT15/16

Dimensions

Housing Width A	27.9 mm 1.098 in
Total Length H	123.8 mm 4.874 in
Total Height L	69.8 mm 2.748 in
Bolt Hole Spacing J	99.2 mm 3.906 in
Bolt Hole Size N	11.5 mm 0.453 in
Flange Thickness A1	11.1 mm 0.437 in
Center of Bearing from Housing End A2	19.8 mm 0.780 in
Inside Ring Width B	31.00 mm 1.220 in
Center of Bearing from Bearing End S	19.8 mm 0.780 in

Basic Load Ratings

Static Load Rating	1750 lbf 7800 N
Dynamic Load Rating	3490 lbf 15500 N

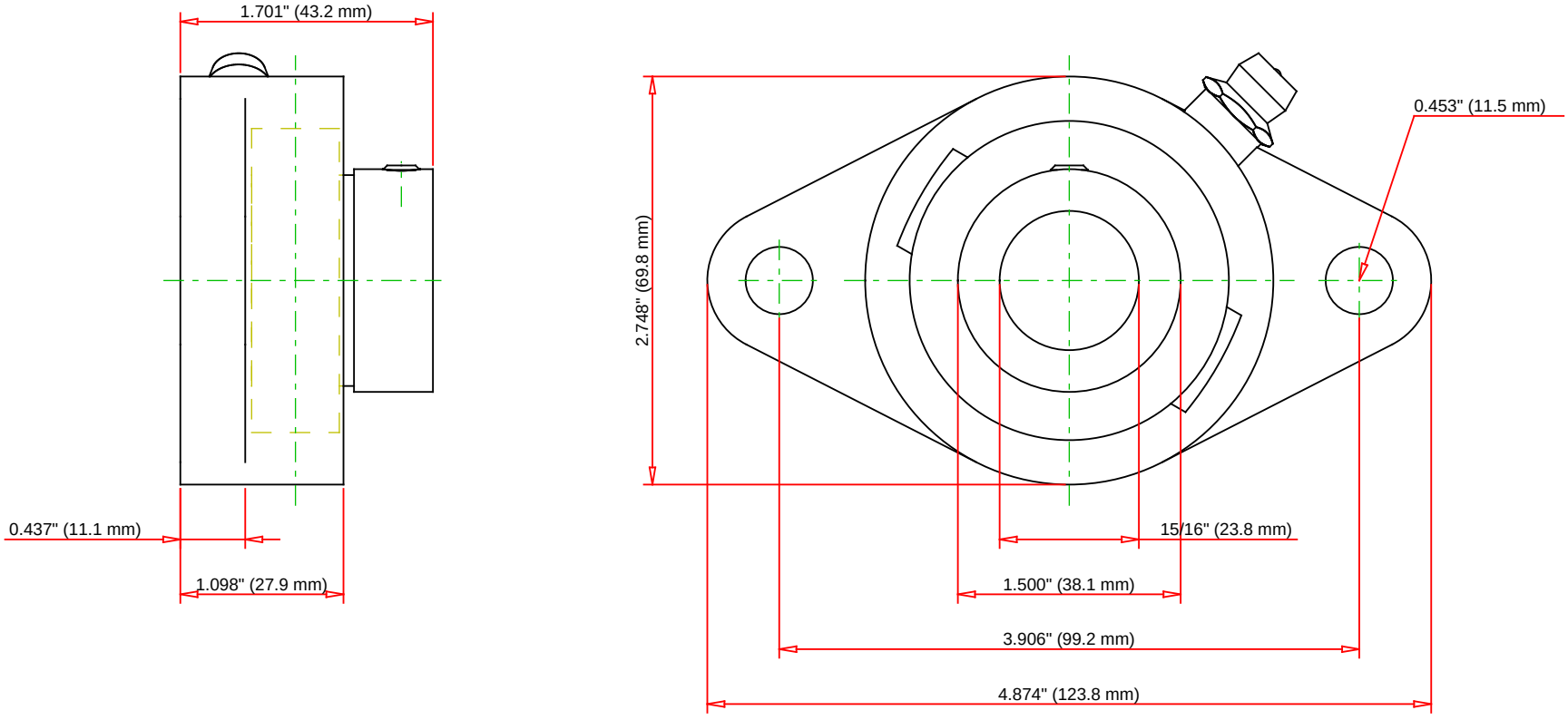

Bearing Number	GRA015RRB				
Load Ratings - C_r	3490	lbf	15500	N	
Load Ratings - C_{0r}	1750	lbf	7800	N	
Weight	1.631	lb	0.74	kg	

TIMKEN

THE TIMKEN COMPANY
NORTH CANTON, OHIO USA

VCJT 15/16

Fafnir® Two-Bolt Flanged Units Eccentric Locking Collar

Every reasonable effort has been made to ensure the accuracy of the information contained in this writing, but no liability is accepted for errors, omissions or for any other reason.

FOR DISCUSSION ONLY