The Timken Company
4500 Mt Pleasant St. NW
N. Canton, OH 44720
Phone: (234) 262-3000
E-Mail: CustomerCAD@timken.com • **Web site:** www.timken.com

Timken Part Number 09067 - 09196, Tapered Roller Bearings - TS (Tapered Single) Imperial

This is the most basic and most widely used type of tapered roller bearing. It consists of two main separable parts: the cone (inner ring) assembly and the cup (outer ring). It is typically mounted in opposing pairs on a shaft.



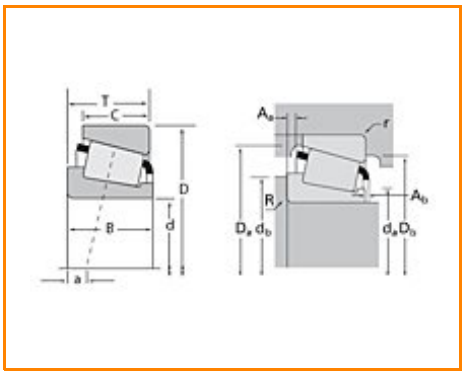

Specifications | Dimensions | Abutment and Fillet Dimensions | Basic Load Ratings | Factors

Specifications

Series	09000
Cone Part Number	09067
Cup Part Number	09196
Design Units	Imperial
Bearing Weight	0.200 Kg 0.4 lb
Cage Type	Stamped Steel

Dimensions

d - Bore	19.050 mm 0.7500 in

D - Cup Outer Diameter	49.225 mm 1.9380 in
B - Cone Width	19.050 mm 0.7500 in
C - Cup Width	17.463 mm 0.6875 in
T - Bearing Width	21.209 mm 0.8350 in

Abutment and Fillet Dimensions

R - Cone Backface "To Clear" Radius[1]	1.270 mm 0.050 in
r - Cup Backface "To Clear" Radius[2]	1.52 mm 0.06 in
da - Cone Frontface Backing Diameter	23.88 mm 0.94 in
db - Cone Backface Backing Diameter	25.40 mm 1.00 in
Da - Cup Frontface Backing Diameter	44.50 mm 1.79 in
Db - Cup Backface Backing Diameter	41.40 mm 1.63 in
Ab - Cage-Cone Frontface Clearance	2 mm 0.08 in
Aa - Cage-Cone Backface Clearance	-0.3 mm -0.01 in
a - Effective Center Location[3]	-7.4 mm -0.29 in

Basic Load Ratings

C90 - Dynamic Radial Rating (90 million revolutions)[4]	11100 N 2500 lbf
C1 - Dynamic Radial Rating (1 million revolutions)[5]	42800 N 9630 lbf
C0 - Static Radial Rating	40500 N 9100 lbf
C_{a90} - Dynamic Thrust Rating (90 million revolutions)[6]	5050 N 1140 lbf

Factors

K - Factor[7]	2.2
e - ISO Factor[8]	0.27
Y - ISO Factor[9]	2.26
G1 - Heat Generation Factor (Roller-Raceway)	8
G2 - Heat Generation Factor (Rib-Roller End)	4.05
Cg - Geometry Factor	0.0452

[1] These maximum fillet radii will be cleared by the bearing corners.
[2] These maximum fillet radii will be cleared by the bearing corners.
[3] Negative value indicates effective center inside cone backface.
[4] Based on 90 x 10^6 revolutions L_{10} life, for The Timken Company life calculation method. C_{90} and C_{a90} are radial and thrust values.
[5] Based on 1 x 10^6 revolutions L_{10} life, for the ISO life calculation method.
[6] Based on 90 x 10^6 revolutions L_{10} life, for The Timken Company life calculation method. C_{90} and C_{a90} are radial and thrust values for a single-row, $C_{90(2)}$ is the two-row radial value.
[7] These factors apply for both inch and metric calculations. Consult your Timken representative for instruction on use.
[8] These factors apply for both inch and metric calculations. Consult your Timken representative for instruction on use.
[9] These factors apply for both inch and metric calculations. Consult your Timken representative for instruction on use.

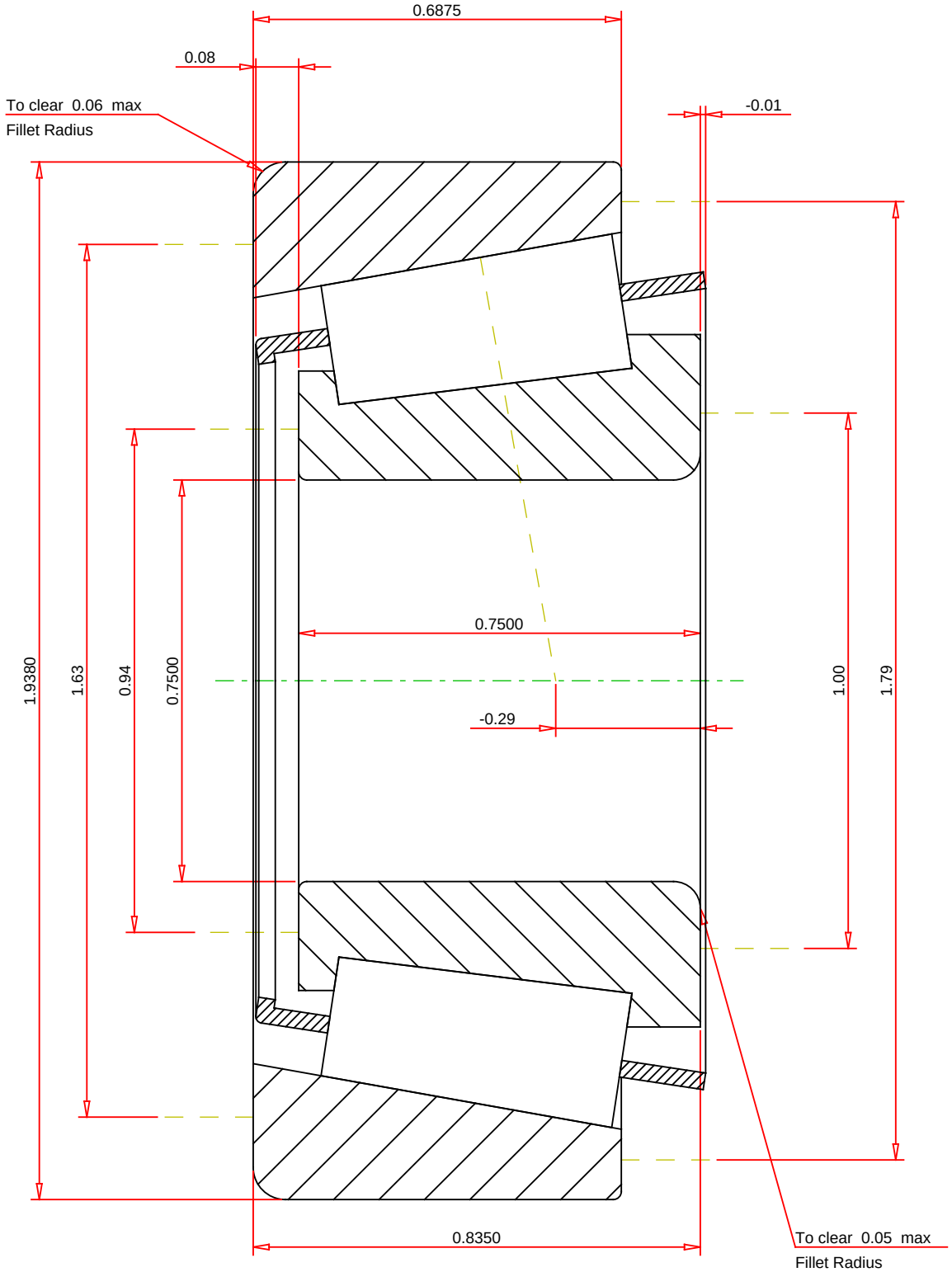

IMPERIAL UNITS

ISO Factor - e	0.27	
ISO Factor - Y	2.26	
Bearing Weight	0.4	lb
Number of Rollers Per Row	12	
Effective Center Location	-0.29	inch

TIMKEN

09067 - 09196
TS BEARING ASSEMBLY

THE TIMKEN COMPANY
NORTH CANTON, OHIO USA

K Factor	2.2	
Dynamic Radial Rating - C90	11100	lbf
Dynamic Thrust Rating - Ca90	5050	lbf
Static Radial Rating - C0	40500	lbf
Dynamic Radial Rating - C1	42800	lbf

Every reasonable effort has been made to ensure the accuracy of the information contained in this writing, but no liability is accepted for errors, omissions or for any other reason.

FOR DISCUSSION ONLY