The Timken Company
4500 Mt Pleasant St. NW
N. Canton, OH 44720
Phone: (234) 262-3000
E-Mail: CustomerCAD@timken.com • **Web site:** www.timken.com

Timken Part Number VCJT 5/8, Two-Bolt Flanged Units Eccentric Locking Collar (Includes Industrial and Standard Series)



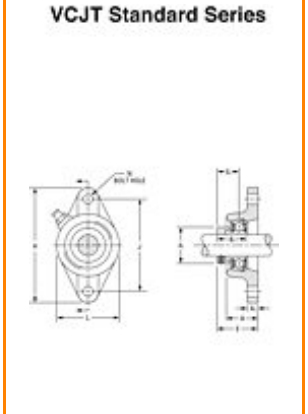

Specifications | Dimensions | Basic Load Ratings

Specifications

Bore Size d	5/8 in 15.9 mm
Bearing Number	GRA010RRB
Dimension E	1.547 in 39.3 mm
Inside Ring Outside Diameter	1.106 in 28.1 mm
Series	Standard
Weight	1.301 lb 0.590 Kg
Seal Type	Molded Shroud

Dimensions

Total Width A	23.6 mm 0.929 in
Total Length H	98.4 mm 3.874 in
Total Height L	53.9 mm 2.122 in
Bolt Hole Spacing J	76.2 mm 3.000 in
Bolt Hole Size N	10.7 mm 0.421 in
Flange Thickness A1	10.3 mm 0.406 in
Center of Bearing from Housing End A2	17.1 mm 0.673 in
Inside Ring Width B	28.6 mm 1.126 in
Center of Bearing from Bearing End S	17.1 mm 0.673 in

Basic Load Ratings

Static Load Rating	2400 lbf 10600 N
Dynamic Load Rating	1100 lbf 4700 N

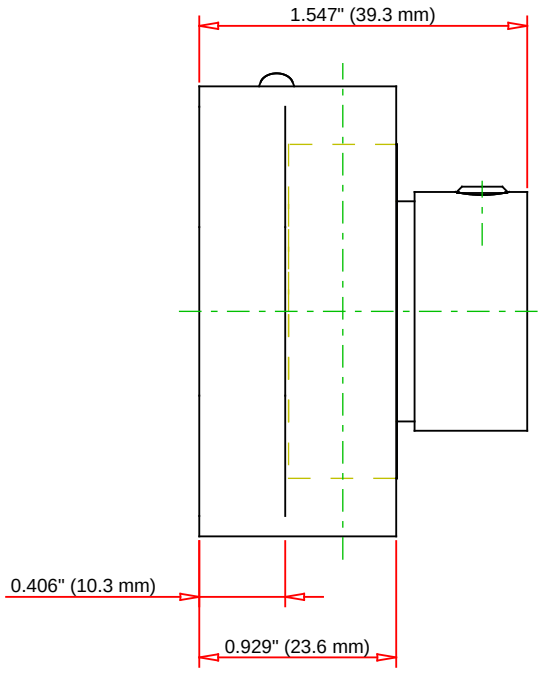

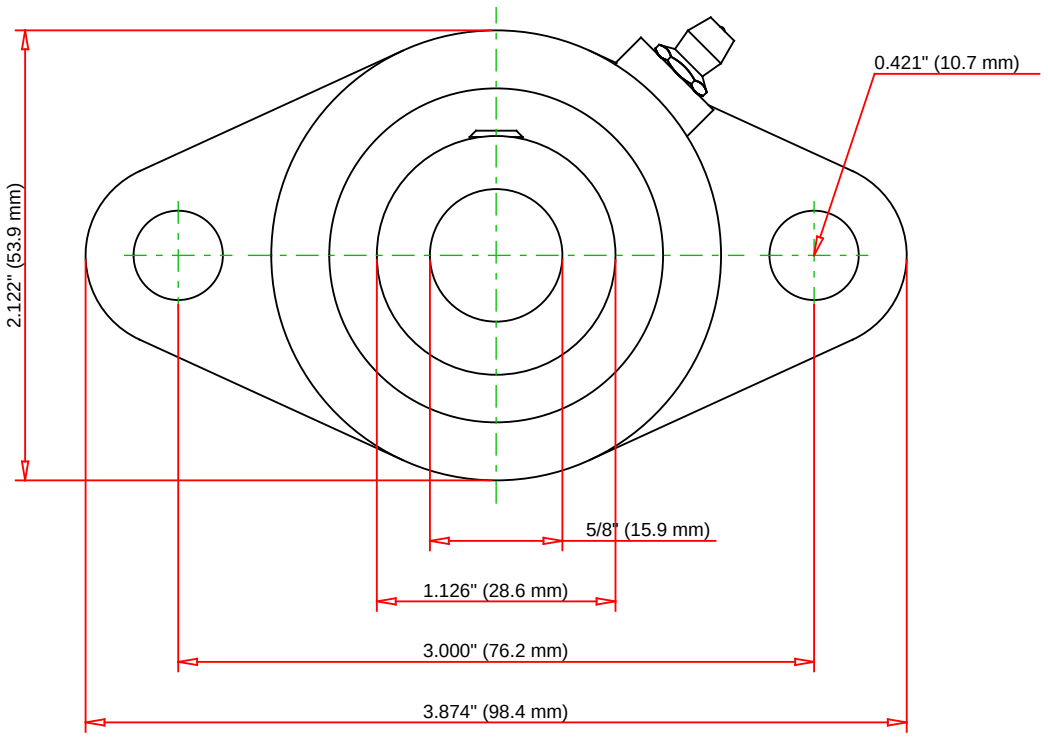

Bearing Number	GRA010RRB				
Load Ratings - C_r	2360	lbf	10600	N	
Load Ratings - C_{0r}	1060	lbf	4700	N	
Weight	1.301	lb	0.59	kg	

TIMKEN

THE TIMKEN COMPANY
NORTH CANTON, OHIO USA

VCJT 5/8

Two-Bolt Flanged Units Eccentric Locking Collar
(Includes Industrial and Standard Series)

Every reasonable effort has been made to ensure the accuracy of the information contained in this writing, but no liability is accepted for errors, omissions or for any other reason.

FOR DISCUSSION ONLY