The Timken Company
4500 Mt Pleasant St. NW
N. Canton, OH 44720
Phone: (234) 262-3000
E-Mail: CustomerCAD@timken.com • **Web site:** www.timken.com

Timken Part Number LL713049 - LL713010, Tapered Roller Bearings - TS (Tapered Single) Imperial

This is the most basic and most widely used type of tapered roller bearing. It consists of two main separable parts: the cone (inner ring) assembly and the cup (outer ring). It is typically mounted in opposing pairs on a shaft.



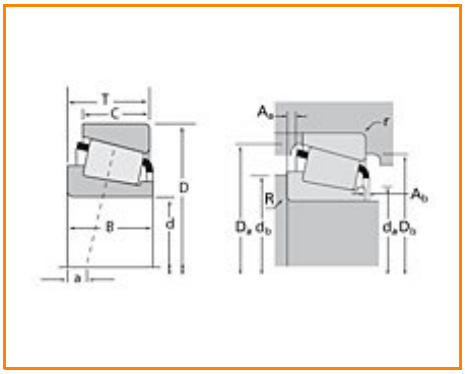

Specifications | Dimensions | Abutment and Fillet Dimensions | Basic Load Ratings | Factors

Specifications

Series	LL713000
Cone Part Number	LL713049
Cup Part Number	LL713010
Design Units	Imperial
Bearing Weight	0.300 Kg 0.60 lb
Cage Type	Stamped Steel

Dimensions

d - Bore	69.850 mm 2.7500 in
D - Cup Outer Diameter	98.425 mm 3.8750 in
B - Cone Width	13.495 mm 0.5313 in
C - Cup Width	9.525 mm 0.3750 in
T - Bearing Width	13.495 mm 0.5313 in

Abutment and Fillet Dimensions

R - Cone Backface "To Clear" Radius[1]	1.520 mm 0.06 in
r - Cup Backface "To Clear" Radius[2]	1.52 mm 0.06 in
da - Cone Frontface Backing Diameter	73.91 mm 3.54 in
db - Cone Backface Backing Diameter	76.96 mm 3.03 in
Da - Cup Frontface Backing Diameter	94.00 mm 3.74 in
Db - Cup Backface Backing Diameter	91.95 mm 3.62 in
Ab - Cage-Cone Frontface Clearance	2 mm 0.08 in
Aa - Cage-Cone Backface Clearance	0.8 mm 0.03 in
a - Effective Center Location[3]	4.6 mm 0.18 in

Basic Load Ratings

C90 - Dynamic Radial Rating (90 million revolutions)[4]	10500 N 2350 lbf
C1 - Dynamic Radial Rating (1 million revolutions)[5]	40300 N 9070 lbf
C0 - Static Radial Rating	58100 N 13100 lbf
C_{a90} - Dynamic Thrust Rating (90 million revolutions)[6]	7840 N 1760 lbf

Factors

K - Factor[7]	1.33
e - ISO Factor[8]	0.44
Y - ISO Factor[9]	1.37
G1 - Heat Generation Factor (Roller-Raceway)	39.9
G2 - Heat Generation Factor (Rib-Roller End)	55
Cg - Geometry Factor	0.0893

[1] These maximum fillet radii will be cleared by the bearing corners.

[2] These maximum fillet radii will be cleared by the bearing corners.

[3] Negative value indicates effective center inside cone backface.

[4] Based on 90 x 10^6 revolutions L_{10} life, for The Timken Company life calculation method. C_{90} and C_{a90} are radial and thrust values.

[5] Based on 1 x 10^6 revolutions L_{10} life, for the ISO life calculation method.

[6] Based on 90 x 10^6 revolutions L_{10} life, for The Timken Company life calculation method. C_{90} and C_{a90} are radial and thrust values for a single-row, $C_{90(2)}$ is the two-row radial value.

[7] These factors apply for both inch and metric calculations. Consult your Timken representative for instruction on use.

[8] These factors apply for both inch and metric calculations. Consult your Timken representative for instruction

on use.

[9] These factors apply for both inch and metric calculations. Consult your Timken representative for instruction on use.

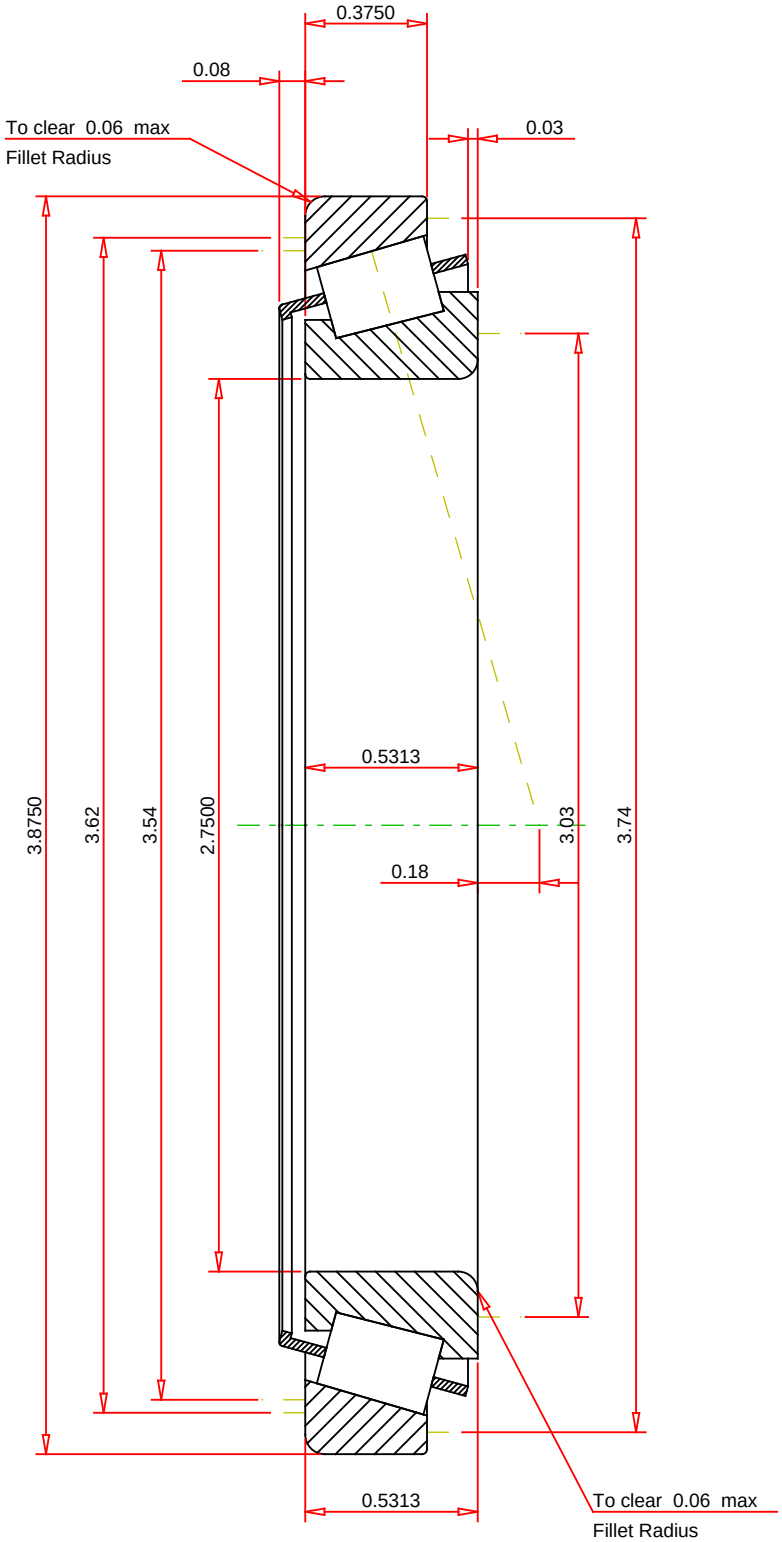

IMPERIAL UNITS

ISO Factor - e	0.44	
ISO Factor - Y	1.37	
Bearing Weight	0.6	lb
Number of Rollers Per Row	34	
Effective Center Location	0.18	inch

TIMKEN

THE TIMKEN COMPANY
NORTH CANTON, OHIO USA

LL713049 - LL713010
TS BEARING ASSEMBLY

K Factor	1.33	
Dynamic Radial Rating - C90	10500	lbf
Dynamic Thrust Rating - Ca90	7840	lbf
Static Radial Rating - C0	58100	lbf
Dynamic Radial Rating - C1	40300	lbf

Every reasonable effort has been made to ensure the accuracy of the information contained in this writing, but no liability is accepted for errors, omissions or for any other reason.

FOR DISCUSSION ONLY