The Timken Company
4500 Mt Pleasant St. NW
N. Canton, OH 44720
Phone: (234) 262-3000
E-Mail: CustomerCAD@timken.com • **Web site:** www.timken.com

Timken Part Number L44643 - L44610, Tapered Roller Bearings - TS (Tapered Single) Imperial

This is the most basic and most widely used type of tapered roller bearing. It consists of two main separable parts: the cone (inner ring) assembly and the cup (outer ring). It is typically mounted in opposing pairs on a shaft.



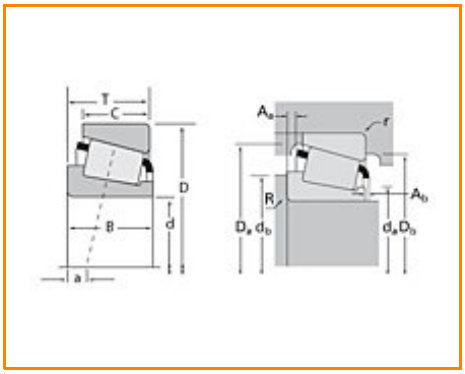

Specifications | Dimensions | Abutment and Fillet Dimensions | Basic Load Ratings | Factors

Specifications

Series	L44600
Cone Part Number	L44643
Cup Part Number	L44610
Design Units	Imperial
Bearing Weight	0.100 Kg 0.30 lb
Cage Type	Stamped Steel

Dimensions

d - Bore	25.400 mm 1.0000 in
D - Cup Outer Diameter	50.292 mm 1.9800 in
B - Cone Width	14.732 mm 0.5800 in
C - Cup Width	10.668 mm 0.4200 in
T - Bearing Width	14.224 mm 0.5600 in

Abutment and Fillet Dimensions

R - Cone Backface "To Clear" Radius[1]	1.270 mm 0.050 in
r - Cup Backface "To Clear" Radius[2]	1.27 mm 0.050 in
da - Cone Frontface Backing Diameter	29.97 mm 1.18 in
db - Cone Backface Backing Diameter	32.00 mm 1.26 in
Da - Cup Frontface Backing Diameter	47.50 mm 1.87 in
Db - Cup Backface Backing Diameter	44.45 mm 1.75 in
Ab - Cage-Cone Frontface Clearance	1.3 mm 0.05 in
Aa - Cage-Cone Backface Clearance	0.5 mm 0.02 in
a - Effective Center Location[3]	-3.3 mm -0.13 in

Basic Load Ratings

C90 - Dynamic Radial Rating (90 million revolutions)[4]	9230 N 2080 lbf
C1 - Dynamic Radial Rating (1 million revolutions)[5]	35600 N 8010 lbf
C0 - Static Radial Rating	32900 N 7400 lbf
C_{a90} - Dynamic Thrust Rating (90 million revolutions)[6]	5910 N 1330 lbf

Factors

K - Factor[7]	1.56
e - ISO Factor[8]	0.37
Y - ISO Factor[9]	1.60
G1 - Heat Generation Factor (Roller-Raceway)	8.9
G2 - Heat Generation Factor (Rib-Roller End)	8.93
Cg - Geometry Factor	0.0526

[1] These maximum fillet radii will be cleared by the bearing corners.

[2] These maximum fillet radii will be cleared by the bearing corners.

[3] Negative value indicates effective center inside cone backface.

[4] Based on 90 x 10^6 revolutions L_{10} life, for The Timken Company life calculation method. C_{90} and C_{a90} are radial and thrust values.

[5] Based on 1 x 10^6 revolutions L_{10} life, for the ISO life calculation method.

[6] Based on 90 x 10^6 revolutions L_{10} life, for The Timken Company life calculation method. C_{90} and C_{a90} are radial and thrust values for a single-row, $C_{90(2)}$ is the two-row radial value.

[7] These factors apply for both inch and metric calculations. Consult your Timken representative for instruction on use.

[8] These factors apply for both inch and metric calculations. Consult your Timken representative for instruction

on use.

[9] These factors apply for both inch and metric calculations. Consult your Timken representative for instruction on use.

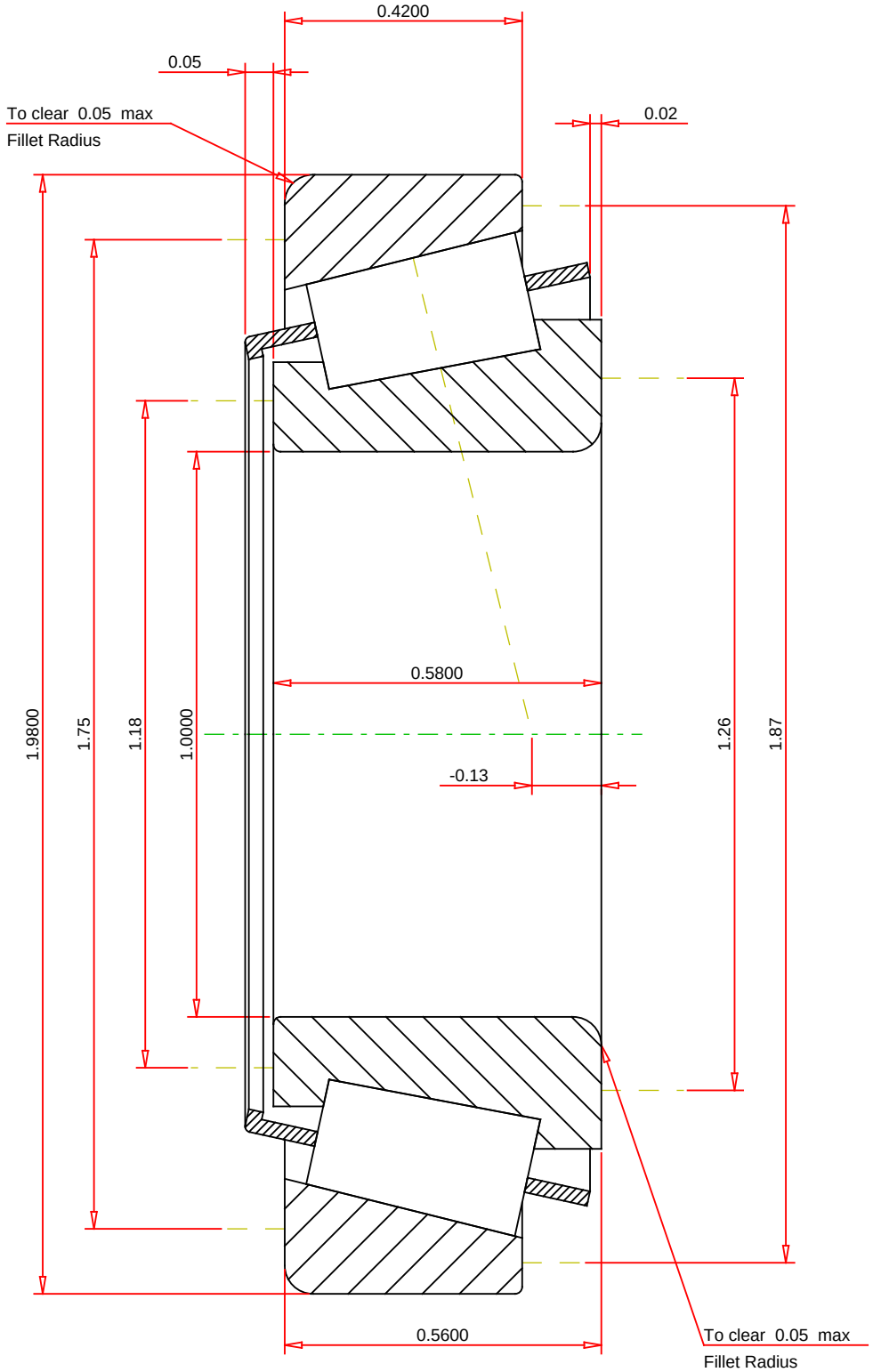

IMPERIAL UNITS

ISO Factor - e	0.37	
ISO Factor - Y	1.6	
Bearing Weight	0.3	lb
Number of Rollers Per Row	19	
Effective Center Location	-0.13	inch

TIMKEN

THE TIMKEN COMPANY
NORTH CANTON, OHIO USA

L44643 - L44610
TS BEARING ASSEMBLY

K Factor	1.56	
Dynamic Radial Rating - C90	9230	lbf
Dynamic Thrust Rating - Ca90	5910	lbf
Static Radial Rating - C0	32900	lbf
Dynamic Radial Rating - C1	35600	lbf

Every reasonable effort has been made to ensure the accuracy of the information contained in this writing, but no liability is accepted for errors, omissions or for any other reason.

FOR DISCUSSION ONLY