The Timken Company
4500 Mt Pleasant St. NW
N. Canton, OH 44720
Phone: (234) 262-3000
E-Mail: CustomerCAD@timken.com • **Web site:** www.timken.com

Timken Part Number L476549 - L476510, Tapered Roller Bearings - TS (Tapered Single) Imperial

This is the most basic and most widely used type of tapered roller bearing. It consists of two main separable parts: the cone (inner ring) assembly and the cup (outer ring). It is typically mounted in opposing pairs on a shaft.



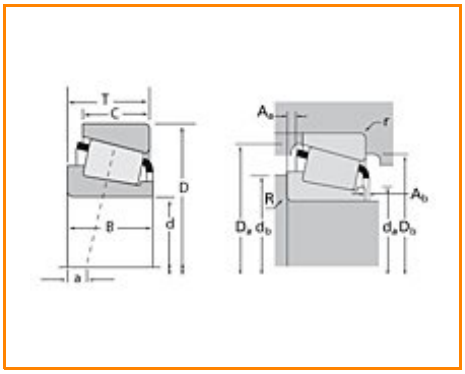

Specifications | Dimensions | Abutment and Fillet Dimensions | Basic Load Ratings | Factors

Specifications

Series	L476500
Cone Part Number	L476549
Cup Part Number	L476510
Design Units	Imperial
Bearing Weight	66.900 Kg 147.400 lb
Cage Type	Stamped Steel

Dimensions

d - Bore	549.275 mm 21.6250 in
D - Cup Outer Diameter	692.150 mm 27.2500 in
B - Cone Width	80.963 mm 3.1875 in
C - Cup Width	61.913 mm 2.4375 in
T - Bearing Width	80.963 mm 3.1875 in

Abutment and Fillet Dimensions

R - Cone Backface "To Clear" Radius[1]	6.35 mm 0.25 in
r - Cup Backface "To Clear" Radius[2]	6.35 mm 0.250 in
da - Cone Frontface Backing Diameter	569.98 mm 26.93 in
db - Cone Backface Backing Diameter	579.12 mm 22.80 in
Da - Cup Frontface Backing Diameter	666.00 mm 26.34 in
Db - Cup Backface Backing Diameter	657.10 mm 25.87 in
Ab - Cage-Cone Frontface Clearance	4.6 mm 0.18 in
Aa - Cage-Cone Backface Clearance	7.1 mm 0.28 in
a - Effective Center Location[3]	32.3 mm 1.27 in

Basic Load Ratings

C90 - Dynamic Radial Rating (90 million revolutions)[4]	394000 N 88500 lbf
C1 - Dynamic Radial Rating (1 million revolutions)[5]	1520000 N 342000 lbf
C0 - Static Radial Rating	3970000 N 892000 lbf
C_{a90} - Dynamic Thrust Rating (90 million revolutions)[6]	254000 N 57000 lbf

Factors

K - Factor[7]	1.55
e - ISO Factor[8]	0.38
Y - ISO Factor[9]	1.59
G1 - Heat Generation Factor (Roller-Raceway)	7260
G2 - Heat Generation Factor (Rib-Roller End)	889
Cg - Geometry Factor	0.257

[1] These maximum fillet radii will be cleared by the bearing corners.

[2] These maximum fillet radii will be cleared by the bearing corners.

[3] Negative value indicates effective center inside cone backface.

[4] Based on 90 x 10^6 revolutions L_{10} life, for The Timken Company life calculation method. C_{90} and C_{a90} are radial and thrust values.

[5] Based on 1 x 10^6 revolutions L_{10} life, for the ISO life calculation method.

[6] Based on 90 x 10^6 revolutions L_{10} life, for The Timken Company life calculation method. C_{90} and C_{a90} are radial and thrust values for a single-row, $C_{90(2)}$ is the two-row radial value.

[7] These factors apply for both inch and metric calculations. Consult your Timken representative for instruction on use.

[8] These factors apply for both inch and metric calculations. Consult your Timken representative for instruction

on use.

[9] These factors apply for both inch and metric calculations. Consult your Timken representative for instruction on use.

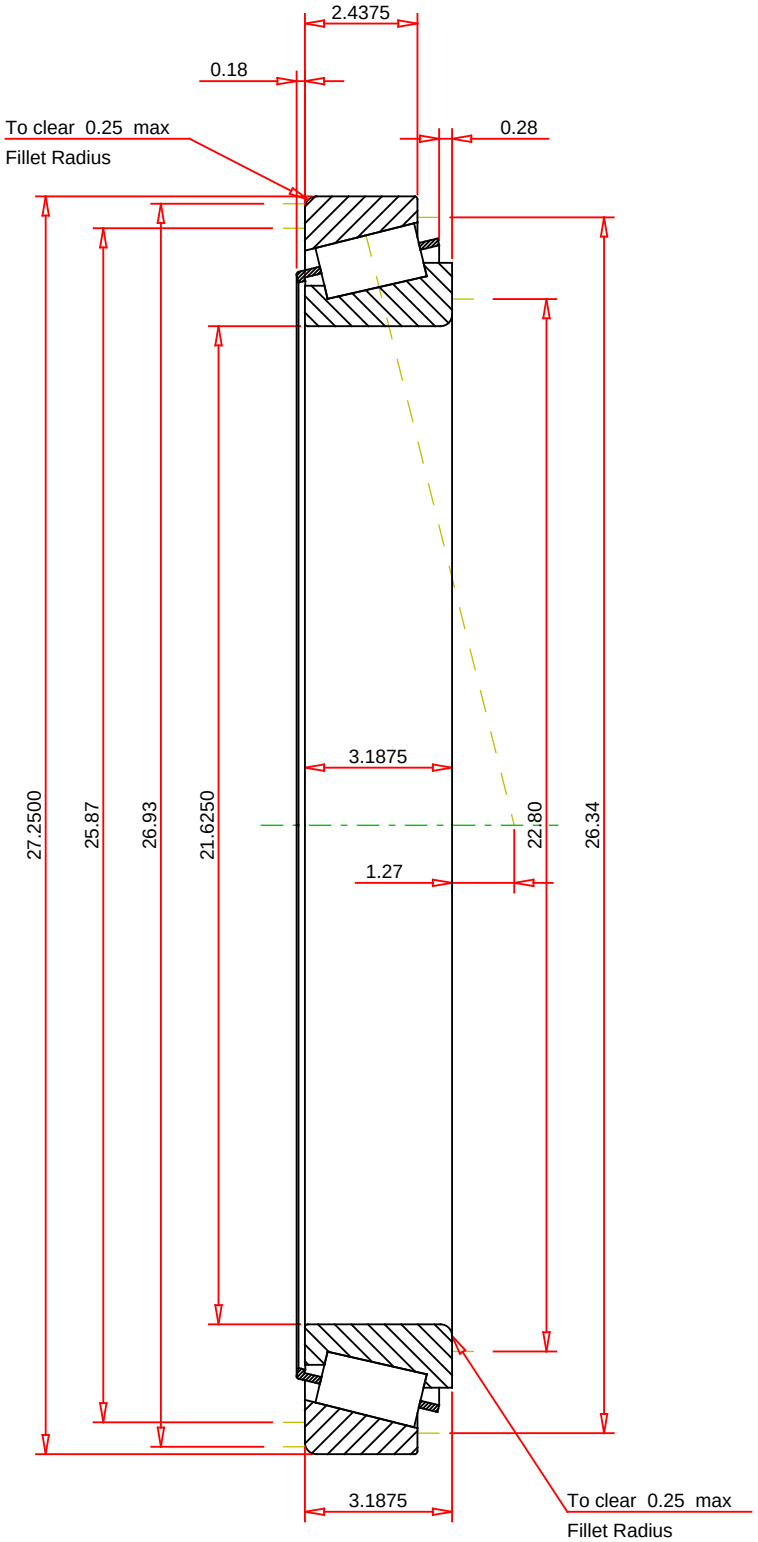

IMPERIAL UNITS

ISO Factor - e	0.38	
ISO Factor - Y	1.59	
Bearing Weight	147.4	lb
Number of Rollers Per Row	51	
Effective Center Location	1.27	inch

TIMKEN®

THE TIMKEN COMPANY
NORTH CANTON, OHIO USA

L476549 - L476510
TS BEARING ASSEMBLY

K Factor	1.55	
Dynamic Radial Rating - C90	394000	lbf
Dynamic Thrust Rating - Ca90	254000	lbf
Static Radial Rating - C0	3970000	lbf
Dynamic Radial Rating - C1	1520000	lbf

Every reasonable effort has been made to ensure the accuracy of the information contained in this writing, but no liability is accepted for errors, omissions or for any other reason.

FOR DISCUSSION ONLY