The Timken Company
4500 Mt Pleasant St. NW
N. Canton, OH 44720
Phone: (234) 262-3000
E-Mail: CustomerCAD@timken.com • **Web site:** www.timken.com

Timken Part Number YCJM1 7/16, Four-Bolt Flanged Units Setscrew Locking (Includes Industrial and Standard Series)



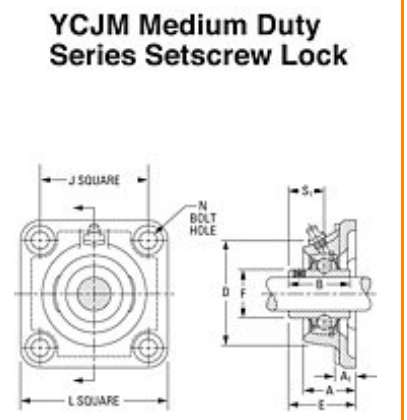

Specifications | Dimensions | Basic Load Ratings

Specifications

Bore Size d	1 7/16 in 36.5 mm
Bearing Number	GYM1107KRRB
Dimension D	3.874 in 98.4 mm
Dimension E	2.142 in 54.4 mm
Inside Ring Outside Diameter	2.058 in 52.27 mm
Series	Medium-Duty
Weight	5.11 lb 2.32 Kg

Seal Type	Shroud Seal

Dimensions

Total Length L	130.2 mm 5.126 in
Total Width A	1.500 in 38.1 mm
Bolt Hole Size N	12 mm 0.472 in
Flange Thickness A1	14.8 mm 0.583 in
Center of Bearing from Housing End A2	24.2 mm 0.953 in
Inside Ring Width B	N/A
Total Height	130.2 mm 5.126 in
Bolt Size	M12
Center of Bearing from Bearing End S	19 mm 0.748 in

Basic Load Ratings

Static Load Rating	4400 lbf 19600 N
Dynamic Load Rating	8150 lbf 36300 N

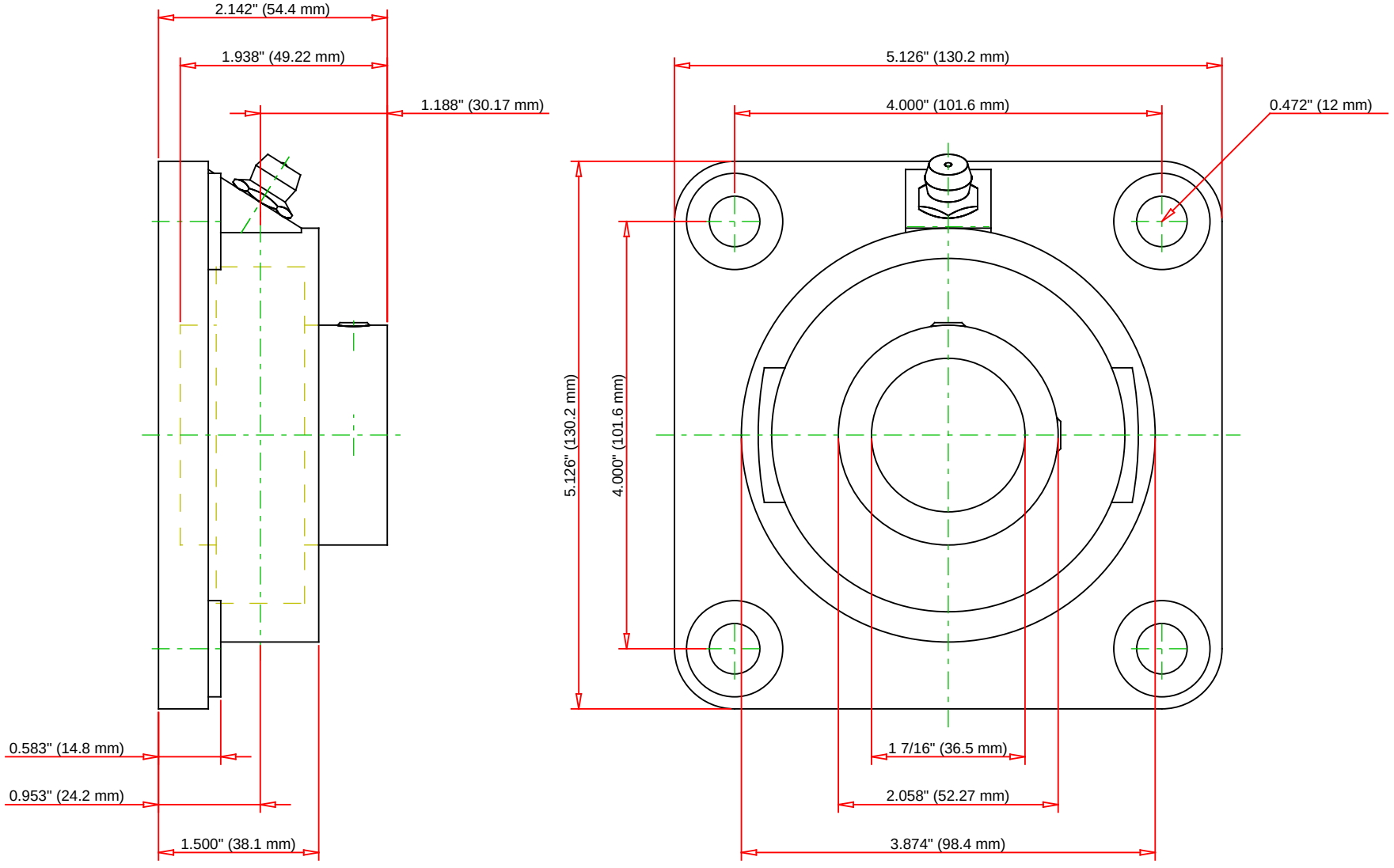

Bearing Number	GYM1107KRRB			
Load Ratings - C_r	8150	lbf	36300	N
Load Ratings - C_{0r}	4400	lbf	19600	N
Weight	0	lb	0	kg
Bolt Size	M8x1.25			

TIMKEN

THE TIMKEN COMPANY
NORTH CANTON, OHIO USA

YCJM1 7/16

Four-Bolt Flanged Units Setscrew Locking
(Includes Industrial and Standard Series)

Every reasonable effort has been made to ensure the accuracy of the information contained in this writing, but no liability is accepted for errors, omissions or for any other reason.

FOR DISCUSSION ONLY