The Timken Company
4500 Mt Pleasant St. NW
N. Canton, OH 44720
Phone: (234) 262-3000
E-Mail: CustomerCAD@timken.com • **Web site:** www.timken.com

Timken Part Number 02475 - 02420, Tapered Roller Bearings - TS (Tapered Single) Imperial

This is the most basic and most widely used type of tapered roller bearing. It consists of two main separable parts: the cone (inner ring) assembly and the cup (outer ring). It is typically mounted in opposing pairs on a shaft.



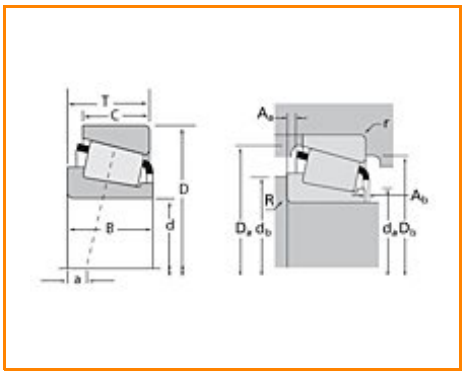

Specifications | Dimensions | Abutment and Fillet Dimensions | Basic Load Ratings | Factors

Specifications

Series	02400
Cone Part Number	02475
Cup Part Number	02420
Design Units	Imperial
Bearing Weight	0.400 Kg 0.80 lb
Cage Type	Stamped Steel

Dimensions

d - Bore	31.750 mm 1.2500 in

D - Cup Outer Diameter	68.263 mm 2.6875 in
B - Cone Width	22.225 mm 0.8750 in
C - Cup Width	17.463 mm 0.6875 in
T - Bearing Width	22.225 mm 0.8750 in

Abutment and Fillet Dimensions

R - Cone Backface "To Clear" Radius[1]	3.560 mm 0.14 in
r - Cup Backface "To Clear" Radius[2]	1.52 mm 0.06 in
da - Cone Frontface Backing Diameter	38.61 mm 1.52 in
db - Cone Backface Backing Diameter	44.45 mm 1.75 in
Da - Cup Frontface Backing Diameter	63.00 mm 2.52 in
Db - Cup Backface Backing Diameter	58.93 mm 2.32 in
Ab - Cage-Cone Frontface Clearance	1.5 mm 0.06 in
Aa - Cage-Cone Backface Clearance	0.8 mm 0.03 in
a - Effective Center Location[3]	-5.1 mm -0.2 in

Basic Load Ratings

C90 - Dynamic Radial Rating (90 million revolutions)[4]	16500 N 3720 lbf
C1 - Dynamic Radial Rating (1 million revolutions)[5]	63800 N 14300 lbf
C0 - Static Radial Rating	70200 N 15800 lbf
C_{a90} - Dynamic Thrust Rating (90 million revolutions)[6]	11800 N 2650 lbf

Factors

K - Factor[7]	1.4
e - ISO Factor[8]	0.42
Y - ISO Factor[9]	1.44
G1 - Heat Generation Factor (Roller-Raceway)	17.5
G2 - Heat Generation Factor (Rib-Roller End)	8.48
Cg - Geometry Factor	0.0681

[1] These maximum fillet radii will be cleared by the bearing corners.
[2] These maximum fillet radii will be cleared by the bearing corners.
[3] Negative value indicates effective center inside cone backface.
[4] Based on 90 x 10^6 revolutions L_{10} life, for The Timken Company life calculation method. C_{90} and C_{a90} are radial and thrust values.
[5] Based on 1 x 10^6 revolutions L_{10} life, for the ISO life calculation method.
[6] Based on 90 x 10^6 revolutions L_{10} life, for The Timken Company life calculation method. C_{90} and C_{a90} are radial and thrust values for a single-row, $C_{90(2)}$ is the two-row radial value.
[7] These factors apply for both inch and metric calculations. Consult your Timken representative for instruction on use.
[8] These factors apply for both inch and metric calculations. Consult your Timken representative for instruction on use.
[9] These factors apply for both inch and metric calculations. Consult your Timken representative for instruction on use.

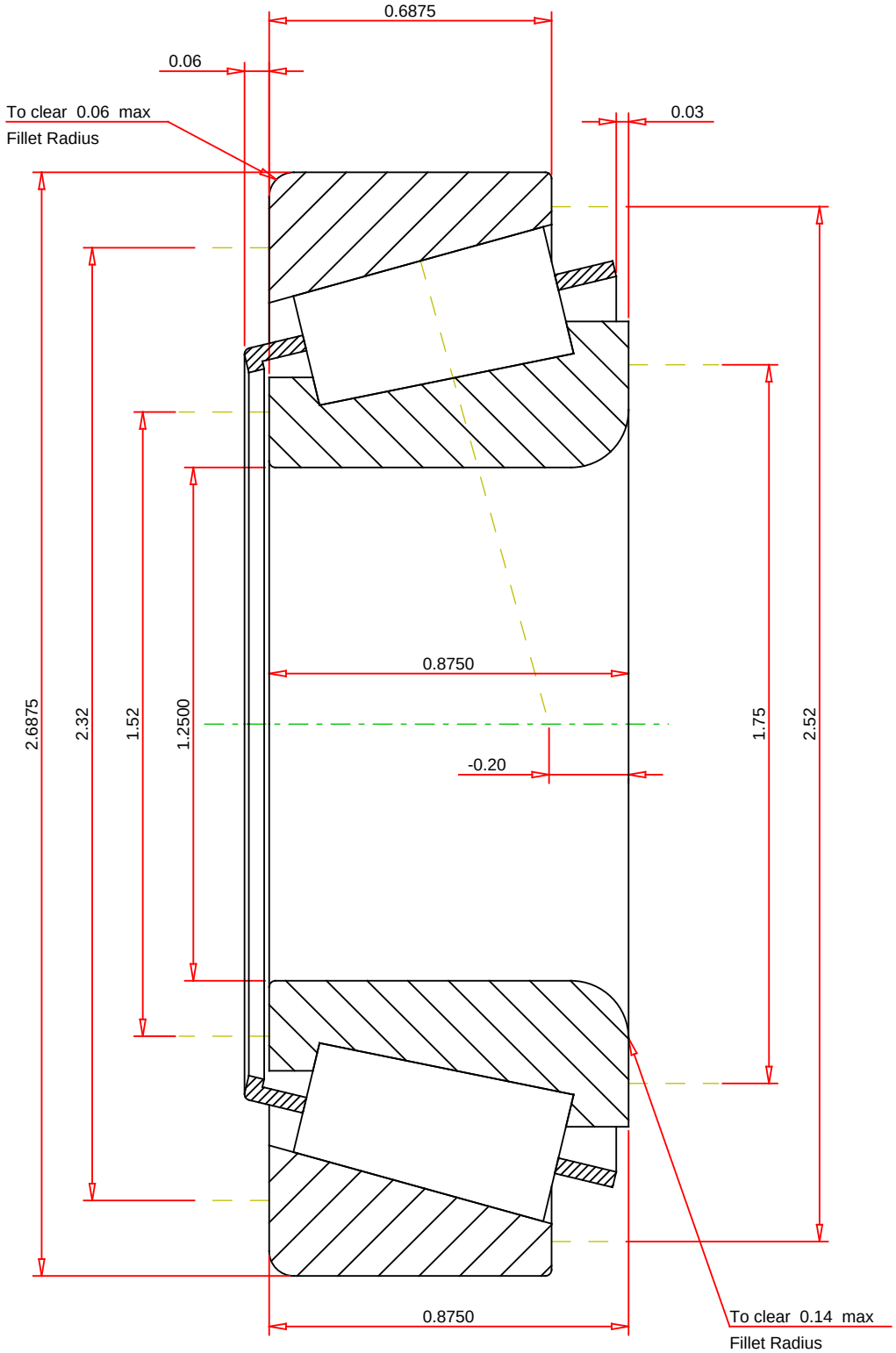

IMPERIAL UNITS

ISO Factor - e	0.42	
ISO Factor - Y	1.44	
Bearing Weight	0.8	lb
Number of Rollers Per Row	16	
Effective Center Location	-0.2	inch

TIMKEN

THE TIMKEN COMPANY
NORTH CANTON, OHIO USA

02475 - 02420
TS BEARING ASSEMBLY

K Factor	1.4	
Dynamic Radial Rating - C90	16500	lbf
Dynamic Thrust Rating - Ca90	11800	lbf
Static Radial Rating - C0	70200	lbf
Dynamic Radial Rating - C1	63800	lbf

Every reasonable effort has been made to ensure the accuracy of the information contained in this writing, but no liability is accepted for errors, omissions or for any other reason.

FOR DISCUSSION ONLY