The Timken Company
4500 Mt Pleasant St. NW
N. Canton, OH 44720
Phone: (234) 262-3000
E-Mail: CustomerCAD@timken.com • **Web site:** www.timken.com

Timken Part Number H414236 - H414210, Tapered Roller Bearings - TS (Tapered Single) Imperial

This is the most basic and most widely used type of tapered roller bearing. It consists of two main separable parts: the cone (inner ring) assembly and the cup (outer ring). It is typically mounted in opposing pairs on a shaft.



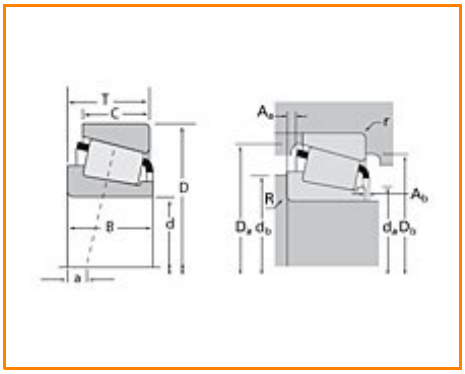

Specifications | Dimensions | Abutment and Fillet Dimensions | Basic Load Ratings | Factors

Specifications

Series	H414200
Cone Part Number	H414236
Cup Part Number	H414210
Design Units	Imperial
Bearing Weight	2.800 Kg 6.100 lb
Cage Type	Stamped Steel

Dimensions

d - Bore	63.500 mm 2.5000 in
D - Cup Outer Diameter	136.525 mm 5.3750 in
B - Cone Width	41.275 mm 1.6250 in
C - Cup Width	31.750 mm 1.2500 in
T - Bearing Width	41.275 mm 1.6250 in

Abutment and Fillet Dimensions

R - Cone Backface "To Clear" Radius[1]	7.110 mm 0.280 in
r - Cup Backface "To Clear" Radius[2]	3.30 mm 0.130 in
da - Cone Frontface Backing Diameter	77.98 mm 3.74 in
db - Cone Backface Backing Diameter	88.90 mm 3.50 in
Da - Cup Frontface Backing Diameter	130.00 mm 5.12 in
Db - Cup Backface Backing Diameter	120.90 mm 4.76 in
Ab - Cage-Cone Frontface Clearance	3.6 mm 0.14 in
Aa - Cage-Cone Backface Clearance	3.3 mm 0.13 in
a - Effective Center Location[3]	-10.9 mm -0.43 in

Basic Load Ratings

C90 - Dynamic Radial Rating (90 million revolutions)[4]	70600 N 15900 lbf
C1 - Dynamic Radial Rating (1 million revolutions)[5]	272000 N 61200 lbf
C0 - Static Radial Rating	335000 N 75400 lbf
C_{a90} - Dynamic Thrust Rating (90 million revolutions)[6]	43500 N 9790 lbf

Factors

K - Factor[7]	1.62
e - ISO Factor[8]	0.36
Y - ISO Factor[9]	1.67
G1 - Heat Generation Factor (Roller-Raceway)	113
G2 - Heat Generation Factor (Rib-Roller End)	22.8
Cg - Geometry Factor	0.0827

[1] These maximum fillet radii will be cleared by the bearing corners.

[2] These maximum fillet radii will be cleared by the bearing corners.

[3] Negative value indicates effective center inside cone backface.

[4] Based on 90 x 10^6 revolutions L_{10} life, for The Timken Company life calculation method. C_{90} and C_{a90} are radial and thrust values.

[5] Based on 1 x 10^6 revolutions L_{10} life, for the ISO life calculation method.

[6] Based on 90 x 10^6 revolutions L_{10} life, for The Timken Company life calculation method. C_{90} and C_{a90} are radial and thrust values for a single-row, $C_{90(2)}$ is the two-row radial value.

[7] These factors apply for both inch and metric calculations. Consult your Timken representative for instruction on use.

[8] These factors apply for both inch and metric calculations. Consult your Timken representative for instruction

on use.

[9] These factors apply for both inch and metric calculations. Consult your Timken representative for instruction on use.

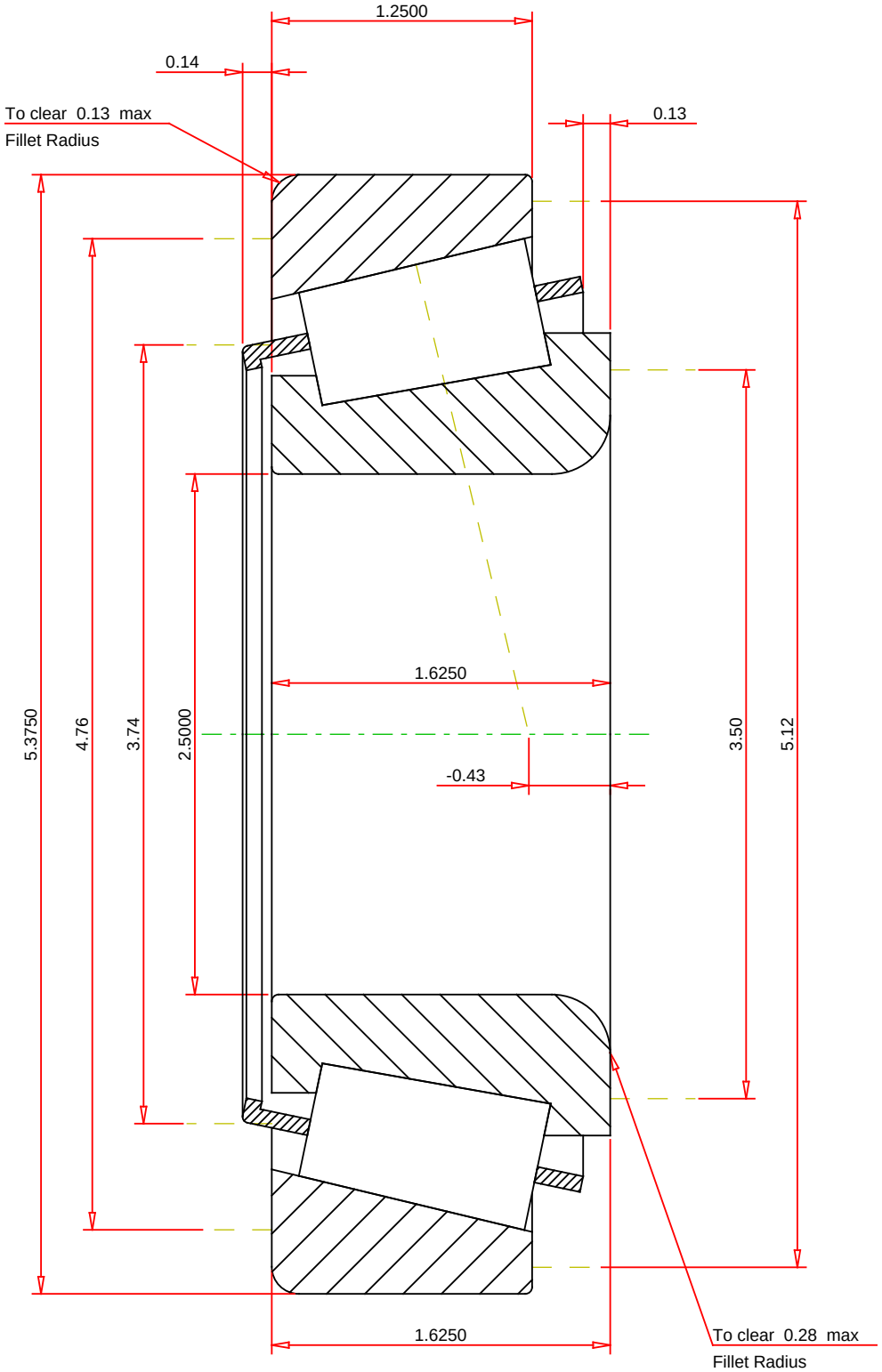

IMPERIAL UNITS

ISO Factor - e	0.36	
ISO Factor - Y	1.67	
Bearing Weight	6.1	lb
Number of Rollers Per Row	17	
Effective Center Location	-0.43	inch

TIMKEN

THE TIMKEN COMPANY
NORTH CANTON, OHIO USA

H414236 - H414210
TS BEARING ASSEMBLY

K Factor	1.62	
Dynamic Radial Rating - C90	70600	lbf
Dynamic Thrust Rating - Ca90	43500	lbf
Static Radial Rating - C0	335000	lbf
Dynamic Radial Rating - C1	272000	lbf

Every reasonable effort has been made to ensure the accuracy of the information contained in this writing, but no liability is accepted for errors, omissions or for any other reason.

FOR DISCUSSION ONLY