The Timken Company
4500 Mt Pleasant St. NW
N. Canton, OH 44720
Phone: (234) 262-3000
E-Mail: CustomerCAD@timken.com • **Web site:** www.timken.com

Timken Part Number JP16049 - JP16010, Tapered Roller Bearings - TS (Tapered Single) Metric

This is the most basic and most widely used type of tapered roller bearing. It consists of two main separable parts: the cone (inner ring) assembly and the cup (outer ring). It is typically mounted in opposing pairs on a shaft.



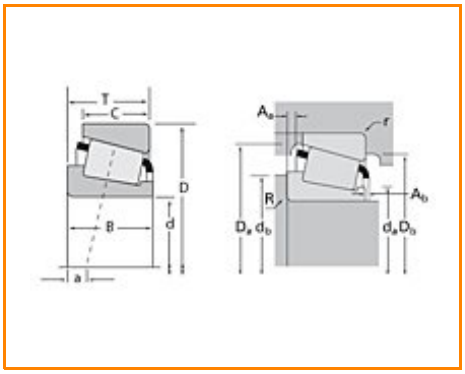

Specifications | Dimensions | Abutment and Fillet Dimensions | Basic Load Ratings | Factors

Specifications

Series	JP16000
Cone Part Number	JP16049
Cup Part Number	JP16010
Design Units	METRIC
Bearing Weight	3.100 Kg 6.90 lb
Cage Type	Stamped Steel

Dimensions

d - Bore	160 mm 6.2992 in
D - Cup Outer Diameter	220.000 mm 8.6614 in
B - Cone Width	30.000 mm 1.1811 in
C - Cup Width	23.000 mm 0.9055 in
T - Bearing Width	32.000 mm 1.2598 in

Abutment and Fillet Dimensions

R - Cone Backface "To Clear" Radius[1]	3.050 mm 0.12 in
r - Cup Backface "To Clear" Radius[2]	3.05 mm 0.12 in
da - Cone Frontface Backing Diameter	168.91 mm 6.65 in
db - Cone Backface Backing Diameter	173.99 mm 6.85 in
Da - Cup Frontface Backing Diameter	214.10 mm 8.43 in
Db - Cup Backface Backing Diameter	205.99 mm 8.11 in
Ab - Cage-Cone Frontface Clearance	4.8 mm 0.19 in
Aa - Cage-Cone Backface Clearance	3 mm 0.12 in
a - Effective Center Location[3]	13.00 mm 0.51 in

Basic Load Ratings

C90 - Dynamic Radial Rating (90 million revolutions)[4]	59300 N 13300 lbf
C1 - Dynamic Radial Rating (1 million revolutions)[5]	229000 N 51400 lbf
C0 - Static Radial Rating	372000 N 83700 lbf
C_{a90} - Dynamic Thrust Rating (90 million revolutions)[6]	49300 N 11100 lbf

Factors

K - Factor[7]	1.2
e - ISO Factor[8]	0.49
Y - ISO Factor[9]	1.23
G1 - Heat Generation Factor (Roller-Raceway)	294
G2 - Heat Generation Factor (Rib-Roller End)	123.3
Cg - Geometry Factor	0.123

[1] These maximum fillet radii will be cleared by the bearing corners.

[2] These maximum fillet radii will be cleared by the bearing corners.

[3] Negative value indicates effective center inside cone backface.

[4] Based on 90 x 10^6 revolutions L_{10} life, for The Timken Company life calculation method. C_{90} and C_{a90} are radial and thrust values.

[5] Based on 1 x 10^6 revolutions L_{10} life, for the ISO life calculation method.

[6] Based on 90 x 10^6 revolutions L_{10} life, for The Timken Company life calculation method. C_{90} and C_{a90} are radial and thrust values for a single-row, $C_{90(2)}$ is the two-row radial value.

[7] These factors apply for both inch and metric calculations. Consult your Timken representative for instruction on use.

[8] These factors apply for both inch and metric calculations. Consult your Timken representative for instruction

on use.

[9] These factors apply for both inch and metric calculations. Consult your Timken representative for instruction on use.

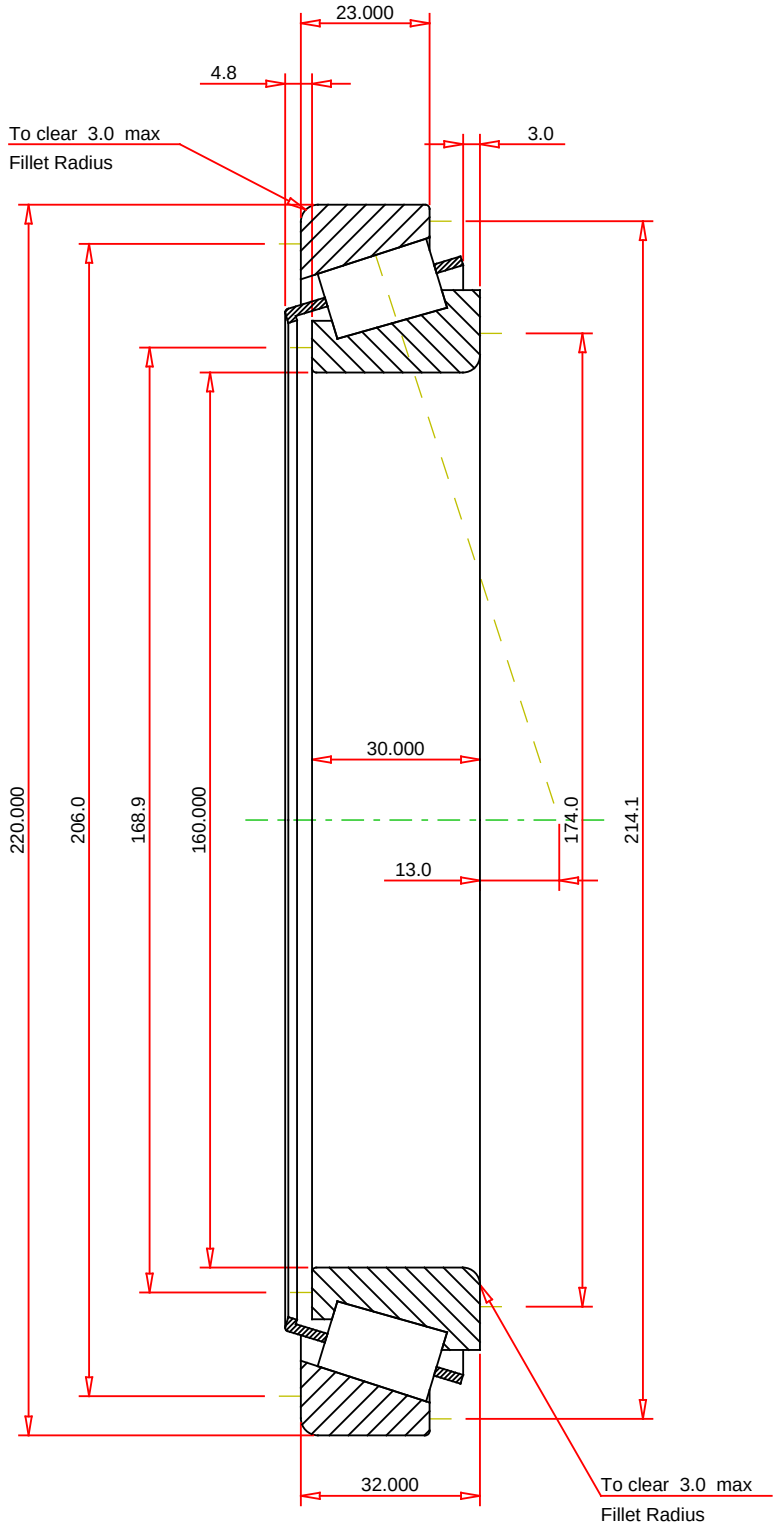

METRIC UNITS

ISO Factor - e	0.49	
ISO Factor - Y	1.23	
Bearing Weight	3.1	kg
Number of Rollers Per Row	29	
Effective Center Location	13	mm

TIMKEN®

THE TIMKEN COMPANY
NORTH CANTON, OHIO USA

JP16049 - JP16010
TS BEARING ASSEMBLY

K Factor	1.2	
Dynamic Radial Rating - C90	59300	N
Dynamic Thrust Rating - Ca90	49300	N
Static Radial Rating - C0	372000	N
Dynamic Radial Rating - C1	229000	N

Every reasonable effort has been made to ensure the accuracy of the information contained in this writing, but no liability is accepted for errors, omissions or for any other reason.

FOR DISCUSSION ONLY