The Timken Company
4500 Mt Pleasant St. NW
N. Canton, OH 44720
Phone: (234) 262-3000
E-Mail: CustomerCAD@timken.com • **Web site:** www.timken.com

Timken Part Number JM738249 - JM738210, Tapered Roller Bearings - TS (Tapered Single) Metric

This is the most basic and most widely used type of tapered roller bearing. It consists of two main separable parts: the cone (inner ring) assembly and the cup (outer ring). It is typically mounted in opposing pairs on a shaft.



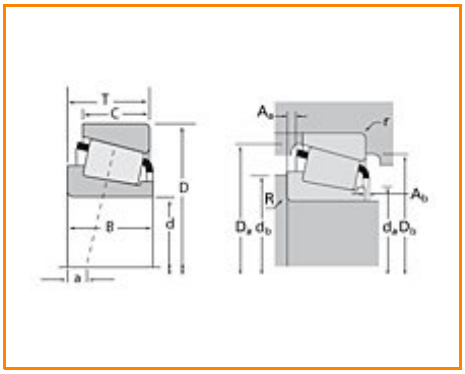

Specifications | Dimensions | Abutment and Fillet Dimensions | Basic Load Ratings | Factors

Specifications

Series	M738200
Cone Part Number	JM738249
Cup Part Number	JM738210
Design Units	METRIC
Bearing Weight	6.800 Kg 15.10 lb
Cage Type	Stamped Steel

Dimensions

d - Bore	190 mm 7.4803 in
D - Cup Outer Diameter	260 mm 10.2362 in
B - Cone Width	44.000 mm 1.7323 in
C - Cup Width	36.500 mm 1.4370 in
T - Bearing Width	46.000 mm 1.8110 in

Abutment and Fillet Dimensions

R - Cone Backface "To Clear" Radius[1]	3.050 mm 0.12 in
r - Cup Backface "To Clear" Radius[2]	2.54 mm 0.1 in
da - Cone Frontface Backing Diameter	199.90 mm 7.87 in
db - Cone Backface Backing Diameter	205.99 mm 8.11 in
Da - Cup Frontface Backing Diameter	252.22 mm 9.93 in
Db - Cup Backface Backing Diameter	242.06 mm 9.53 in
Ab - Cage-Cone Frontface Clearance	4.8 mm 0.19 in
Aa - Cage-Cone Backface Clearance	2.5 mm 0.1 in
a - Effective Center Location[3]	10.90 mm 0.43 in

Basic Load Ratings

C90 - Dynamic Radial Rating (90 million revolutions)[4]	105000 N 23700 lbf
C1 - Dynamic Radial Rating (1 million revolutions)[5]	407000 N 91500 lbf
C0 - Static Radial Rating	807000 N 181000 lbf
C_{a90} - Dynamic Thrust Rating (90 million revolutions)[6]	86200 N 19400 lbf

Factors

K - Factor[7]	1.22
e - ISO Factor[8]	0.48
Y - ISO Factor[9]	1.26
G1 - Heat Generation Factor (Roller-Raceway)	653
G2 - Heat Generation Factor (Rib-Roller End)	147
Cg - Geometry Factor	0.126

[1] These maximum fillet radii will be cleared by the bearing corners.

[2] These maximum fillet radii will be cleared by the bearing corners.

[3] Negative value indicates effective center inside cone backface.

[4] Based on 90 x 10^6 revolutions L_{10} life, for The Timken Company life calculation method. C_{90} and C_{a90} are radial and thrust values.

[5] Based on 1 x 10^6 revolutions L_{10} life, for the ISO life calculation method.

[6] Based on 90 x 10^6 revolutions L_{10} life, for The Timken Company life calculation method. C_{90} and C_{a90} are radial and thrust values for a single-row, $C_{90(2)}$ is the two-row radial value.

[7] These factors apply for both inch and metric calculations. Consult your Timken representative for instruction on use.

[8] These factors apply for both inch and metric calculations. Consult your Timken representative for instruction

on use.

[9] These factors apply for both inch and metric calculations. Consult your Timken representative for instruction on use.

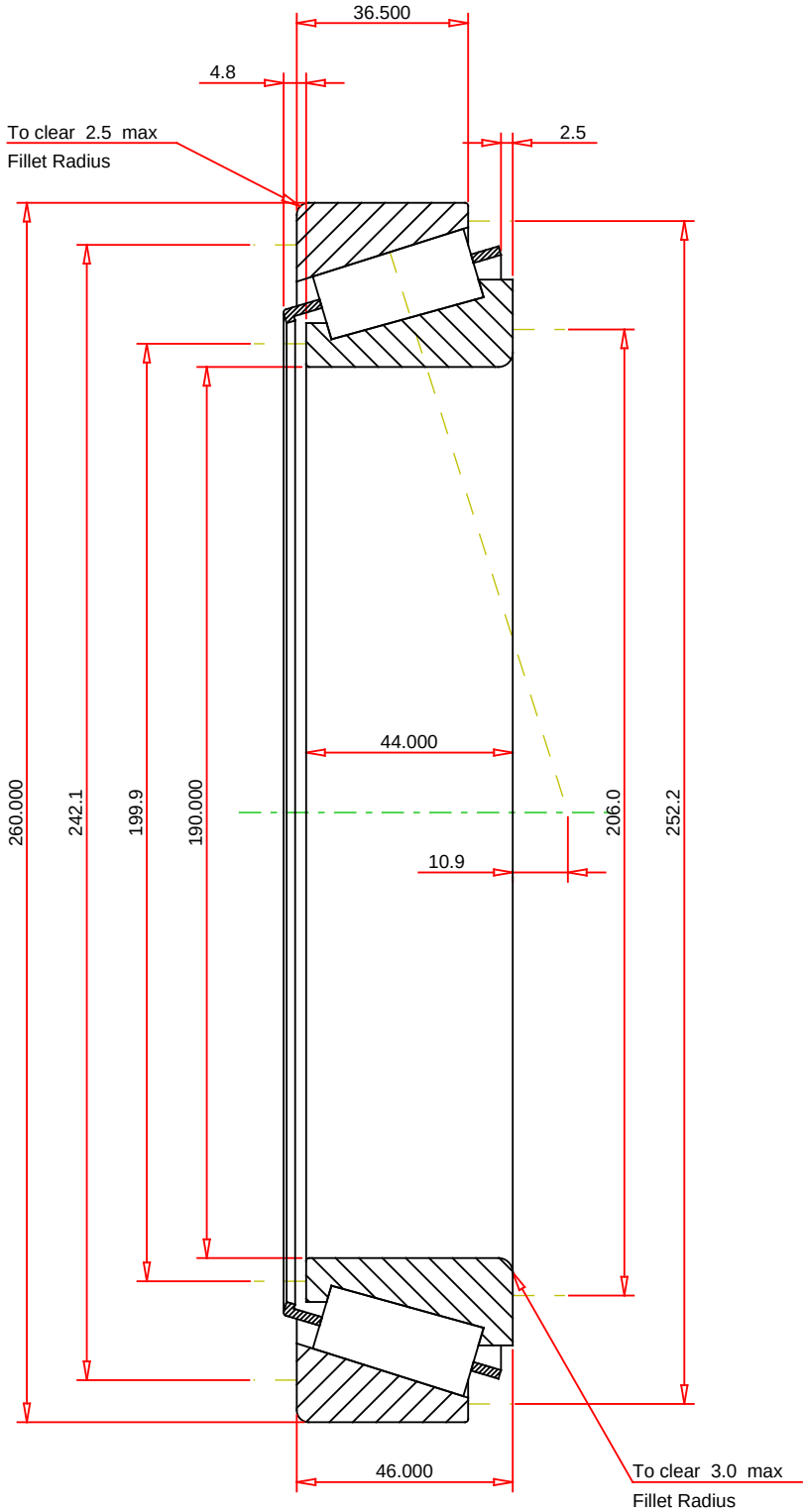

METRIC UNITS

ISO Factor - e	0.48	
ISO Factor - Y	1.26	
Bearing Weight	6.8	kg
Number of Rollers Per Row	34	
Effective Center Location	10.9	mm

TIMKEN®

THE TIMKEN COMPANY
NORTH CANTON, OHIO USA

JM738249 - JM738210
TS BEARING ASSEMBLY

K Factor	1.22	
Dynamic Radial Rating - C90	105000	N
Dynamic Thrust Rating - Ca90	86200	N
Static Radial Rating - C0	807000	N
Dynamic Radial Rating - C1	407000	N

Every reasonable effort has been made to ensure the accuracy of the information contained in this writing, but no liability is accepted for errors, omissions or for any other reason.

FOR DISCUSSION ONLY