The Timken Company
4500 Mt Pleasant St. NW
N. Canton, OH 44720
Phone: (234) 262-3000
E-Mail: CustomerCAD@timken.com • **Web site:** www.timken.com

Timken Part Number 07087X - 07196, Tapered Roller Bearings - TS (Tapered Single) Imperial

This is the most basic and most widely used type of tapered roller bearing. It consists of two main separable parts: the cone (inner ring) assembly and the cup (outer ring). It is typically mounted in opposing pairs on a shaft.



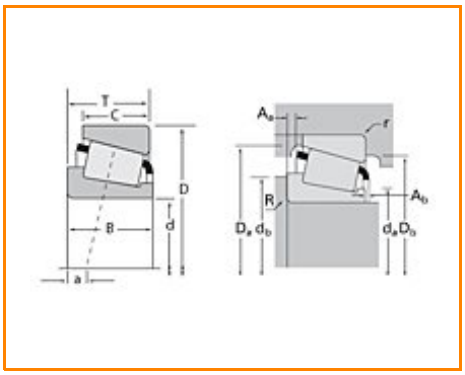

Specifications | Dimensions | Abutment and Fillet Dimensions | Basic Load Ratings | Factors

Specifications

Series	07000
Cone Part Number	07087X
Cup Part Number	07196
Design Units	Imperial
Bearing Weight	0.100 Kg 0.30 lb
Cage Type	Stamped Steel

Dimensions

d - Bore	22.225 mm 0.8750 in

D - Cup Outer Diameter	50.005 mm 1.9687 in
B - Cone Width	14.260 mm 0.5614 in
C - Cup Width	9.525 mm 0.3750 in
T - Bearing Width	13.495 mm 0.5313 in

Abutment and Fillet Dimensions

R - Cone Backface "To Clear" Radius[1]	1.520 mm 0.06 in
r - Cup Backface "To Clear" Radius[2]	1.02 mm 0.04 in
da - Cone Frontface Backing Diameter	26.92 mm 1.06 in
db - Cone Backface Backing Diameter	28.96 mm 1.14 in
Da - Cup Frontface Backing Diameter	47.50 mm 1.87 in
Db - Cup Backface Backing Diameter	44.45 mm 1.75 in
Ab - Cage-Cone Frontface Clearance	2 mm 0.08 in
Aa - Cage-Cone Backface Clearance	0 mm 0 in
a - Effective Center Location[3]	-2.8 mm -0.11 in

Basic Load Ratings

C90 - Dynamic Radial Rating (90 million revolutions)[4]	7550 N 1700 lbf
C1 - Dynamic Radial Rating (1 million revolutions)[5]	29100 N 6540 lbf
C0 - Static Radial Rating	29600 N 6650 lbf
C_{a90} - Dynamic Thrust Rating (90 million revolutions)[6]	5190 N 1170 lbf

Factors

K - Factor[7]	1.45
e - ISO Factor[8]	0.40
Y - ISO Factor[9]	1.49
G1 - Heat Generation Factor (Roller-Raceway)	7.6
G2 - Heat Generation Factor (Rib-Roller End)	7.07
Cg - Geometry Factor	0.0509

[1] These maximum fillet radii will be cleared by the bearing corners.
[2] These maximum fillet radii will be cleared by the bearing corners.
[3] Negative value indicates effective center inside cone backface.
[4] Based on 90 x 10^6 revolutions L_{10} life, for The Timken Company life calculation method. C_{90} and C_{a90} are radial and thrust values.
[5] Based on 1 x 10^6 revolutions L_{10} life, for the ISO life calculation method.
[6] Based on 90 x 10^6 revolutions L_{10} life, for The Timken Company life calculation method. C_{90} and C_{a90} are radial and thrust values for a single-row, $C_{90(2)}$ is the two-row radial value.
[7] These factors apply for both inch and metric calculations. Consult your Timken representative for instruction on use.
[8] These factors apply for both inch and metric calculations. Consult your Timken representative for instruction on use.
[9] These factors apply for both inch and metric calculations. Consult your Timken representative for instruction on use.

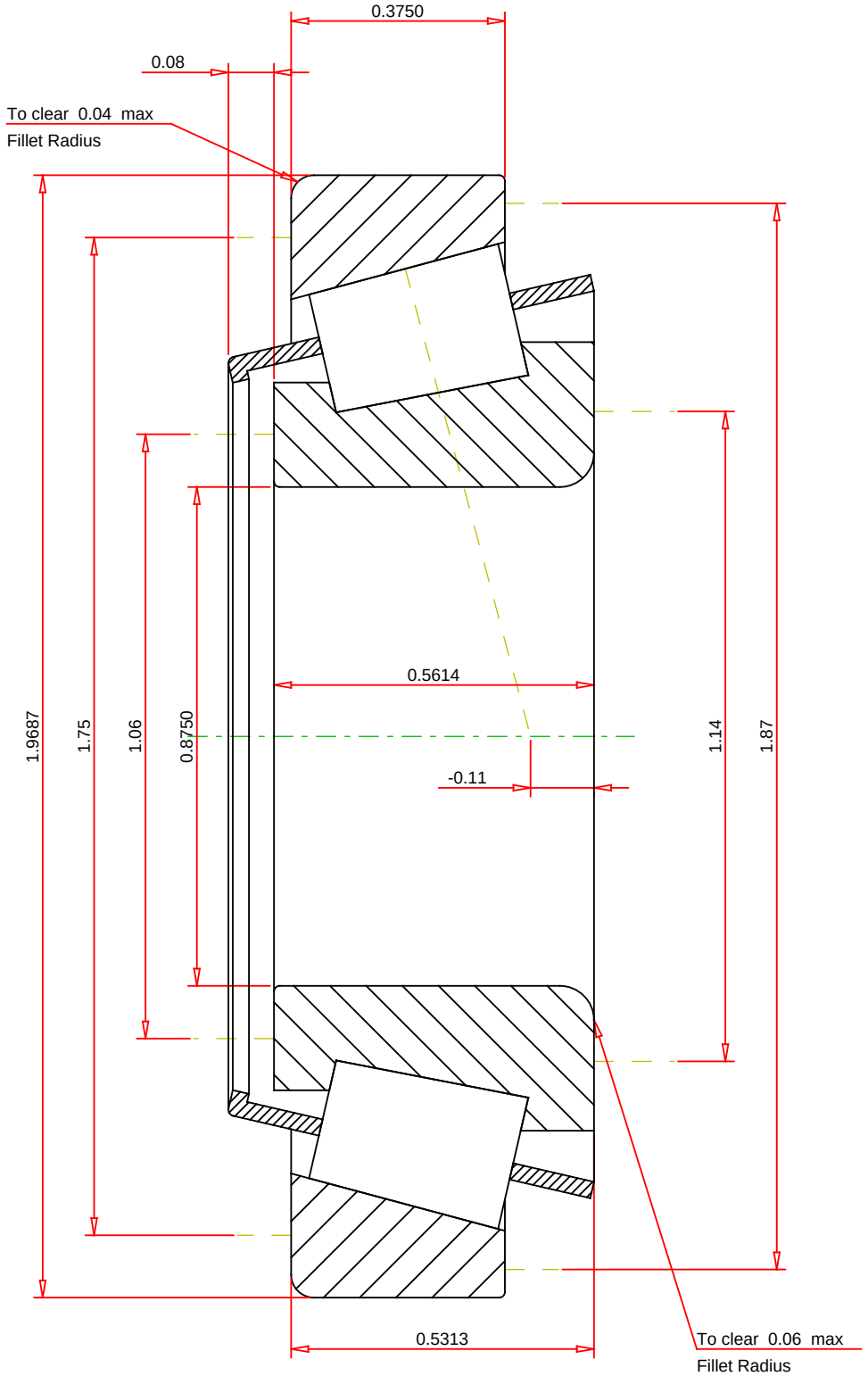

IMPERIAL UNITS

ISO Factor - e	0.4	
ISO Factor - Y	1.49	
Bearing Weight	0.3	lb
Number of Rollers Per Row	16	
Effective Center Location	-0.11	inch

TIMKEN®

THE TIMKEN COMPANY
NORTH CANTON, OHIO USA

07087X - 07196
TS BEARING ASSEMBLY

K Factor	1.45	
Dynamic Radial Rating - C90	7550	lbf
Dynamic Thrust Rating - Ca90	5190	lbf
Static Radial Rating - C0	29600	lbf
Dynamic Radial Rating - C1	29100	lbf

Every reasonable effort has been made to ensure the accuracy of the information contained in this writing, but no liability is accepted for errors, omissions or for any other reason.

FOR DISCUSSION ONLY