The Timken Company
4500 Mt Pleasant St. NW
N. Canton, OH 44720
Phone: (234) 262-3000
E-Mail: CustomerCAD@timken.com • **Web site:** www.timken.com

Part Number YCJ 25 SGT, Fafnir® Four-Bolt Flanged Units Setscrew Locking



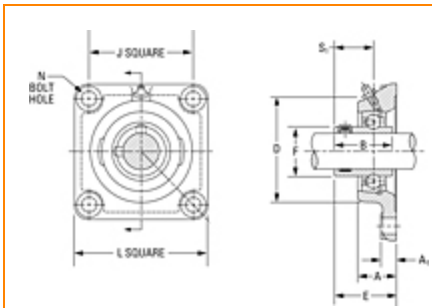

Specifications | Dimensions | Basic Load Ratings

Specifications

Shaft Size d	0.984 in 25 mm
Bearing Number	GYE25KRRB SGT
Dimension D	2.563 in 65.1 mm
Dimension E	1.575 in 40 mm
Inside Ring Outside Diameter	1.334 in 33.88 mm
Series	Industrial
Weight	2.07 lb 0.94 Kg
Seal Type	Shroud Seal

Housing Construction	Four-Bolt Square Flange
Alternate Part Name	YCJ25 SGT

Dimensions

Total Length L	95.2 mm 3.748 in
Housing Width A	1.098 in 27.9 mm
Bolt Hole Size N	10 mm 0.394 in
Flange Thickness A1	12.70 mm 0.500 in
Center of Bearing from Housing End A2	19.4 mm 0.764 in
Inside Ring Width B	N/A
Total Height	95.2 mm 3.748 in
Bolt Size	M10
Center of Bearing from Bearing End S	14.3 mm 0.563 in

Basic Load Ratings

Static Load Rating	1750 lbf 7800 N
Dynamic Load Rating	3490 lbf 15500 N

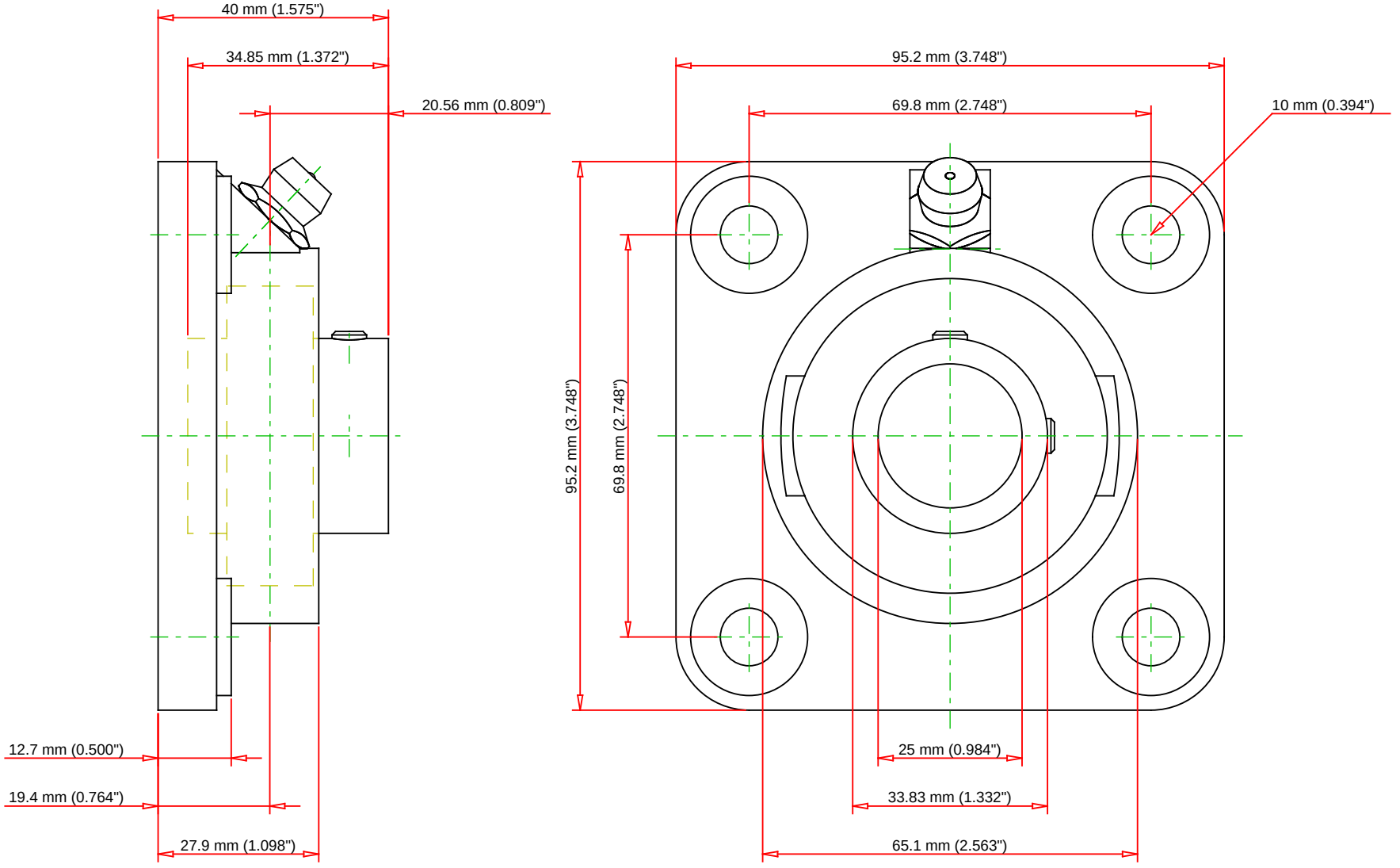

Bearing Number	GYE25KRRB SGT			
Load Ratings - C_r	3550	lbf	15800	N
Load Ratings - C_{0r}	1730	lbf	7700	N
Weight	0	lb	0	kg
Bolt Size	M6x1			

TIMKEN

THE TIMKEN COMPANY
NORTH CANTON, OHIO USA

YCJ 25 SGT

Fafnir® Four-Bolt Flanged Units Setscrew Locking

Every reasonable effort has been made to ensure the accuracy of the information contained in this writing, but no liability is accepted for errors, omissions or for any other reason.

FOR DISCUSSION ONLY