**The Timken Company**
4500 Mt Pleasant St. NW
N. Canton, OH 44720
**Phone:** (234) 262-3000
**E-Mail:** CustomerCAD@timken.com • **Web site:** www.timken.com

# Timken Part Number VCJT 1 1/4 S, Two-Bolt Flanged Units Eccentric Locking Collar (Includes Industrial and Standard Series)



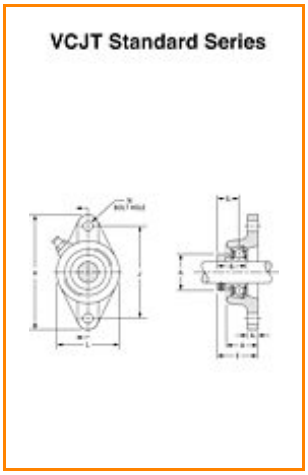


Specifications | Dimensions | Basic Load Ratings

## Specifications

| | |
|---|---|
| **Bore Size d** | 1 1/4 in<br>31.8 mm |
| **Bearing Number** | GRA103RRB2 |
| **Dimension E** | 1.854 in<br>47.1 mm |
| **Inside Ring Outside Diameter** | 1.720 in<br>43.7 mm |
| **Series** | Standard |
| **Weight** | 2.262 lb<br>1.026 Kg |
| **Seal Type** | Molded Shroud |

## Dimensions

| | |
|---|---|
| **Total Width A** | 29.9 mm<br>1.177 in |
| **Total Length H** | 141.3 mm<br>5.563 in |
| **Total Height L** | 79.4 mm<br>3.126 in |
| **Bolt Hole Spacing J** | 116.7 mm<br>4.594 in |
| **Bolt Hole Size N** | 11.5 mm<br>0.453 in |
| **Flange Thickness A1** | 11.9 mm<br>0.469 in |
| **Center of Bearing from Housing End A2** | 20.1 mm<br>0.791 in |
| **Inside Ring Width B** | 35.7 mm<br>1.406 in |
| **Center of Bearing from Bearing End S** | 20.1 mm<br>0.791 in |

## Basic Load Ratings

| | |
|---|---|
| **Static Load Rating** | 4900 lbf<br>21800 N |
| **Dynamic Load Rating** | 2500 lbf<br>11100 N |

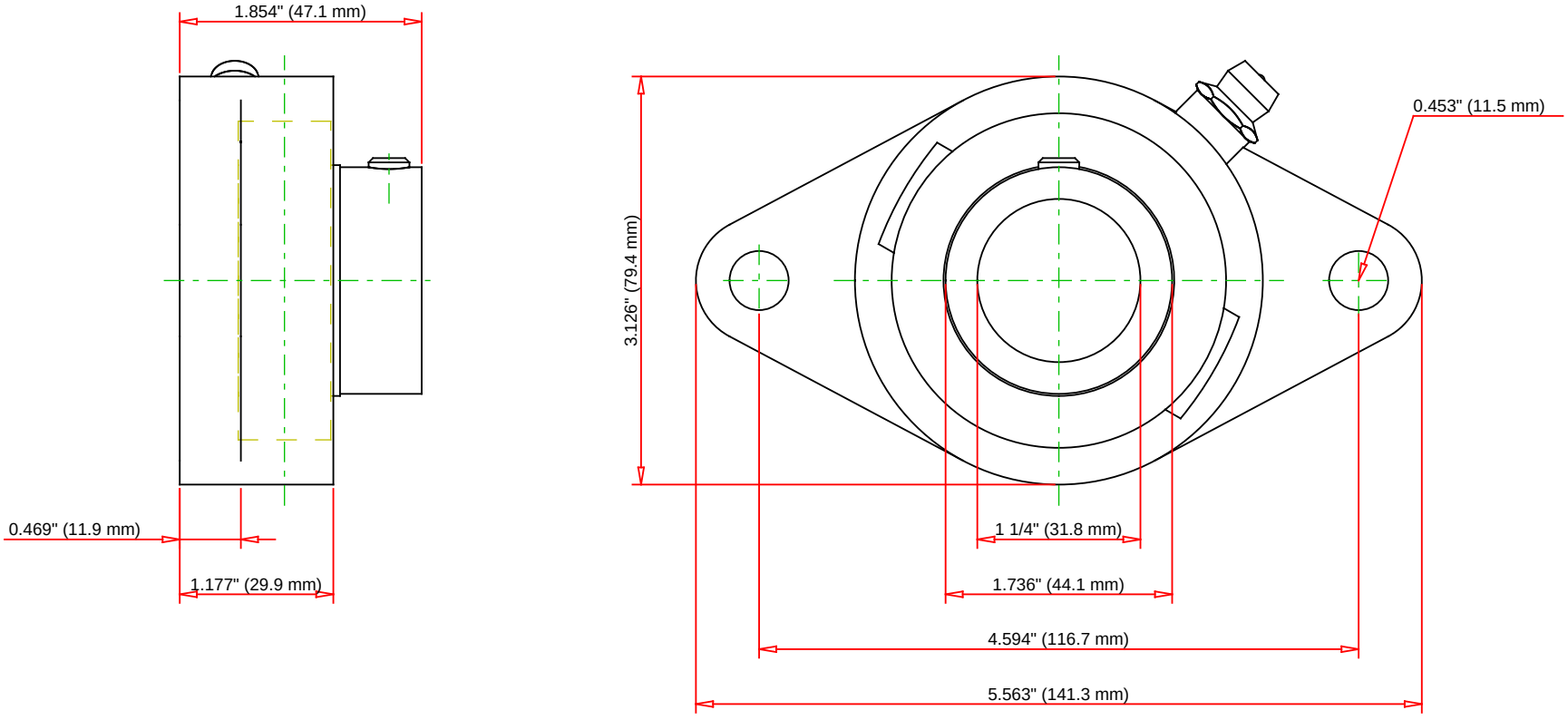


| | | | | | |
|---|---|---|---|---|---|
| Bearing Number | GRA103RRB2 | | | | |
| Load Ratings - $C_r$ | 4900 | lbf | 21800 | N | |
| Load Ratings - $C_{0r}$ | 2500 | lbf | 11100 | N | |
| Weight | 2.262 | lb | 1.026 | kg | |
| | | | | | |

TIMKEN

THE TIMKEN COMPANY
NORTH CANTON, OHIO USA

# VCJT 1 1/4 S

Two-Bolt Flanged Units Eccentric Locking Collar
(Includes Industrial and Standard Series)

Every reasonable effort has been made to ensure the accuracy of the information contained in this writing, but no liability is accepted for errors, omissions or for any other reason.

FOR DISCUSSION ONLY