The Timken Company
4500 Mt Pleasant St. NW
N. Canton, OH 44720
Phone: (234) 262-3000
E-Mail: CustomerCAD@timken.com • **Web site:** www.timken.com

Part Number YCJ 30 SGT, Fafnir® Four-Bolt Flanged Units Setscrew Locking



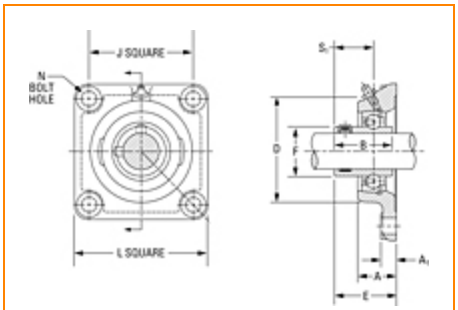

Specifications | Dimensions | Basic Load Ratings

Specifications

Shaft Size d	1.181 in 30 mm
Bearing Number	GYE30KRRB SGT
Dimension D	3.000 in 76.2 mm
Dimension E	1.711 in 43.46 mm
Inside Ring Outside Diameter	1.587 in 40.31 mm
Series	Industrial
Weight	2.87 lb 1.30 Kg
Seal Type	Shroud Seal

Housing Construction	Four-Bolt Square Flange
Alternate Part Name	YCJ30 SGT

Dimensions

Total Length L	107.9 mm 4.248 in
Housing Width A	1.177 in 29.9 mm
Bolt Hole Size N	10 mm 0.394 in
Flange Thickness A1	13.5 mm 0.531 in
Center of Bearing from Housing End A2	20.06 mm 0.79 in
Inside Ring Width B	N/A
Total Height	107.9 mm 4.248 in
Bolt Size	M10
Center of Bearing from Bearing End S	15.89 mm 0.626 in

Basic Load Ratings

Static Load Rating	2530 lbf 11300 N
Dynamic Load Rating	4850 lbf 21600 N

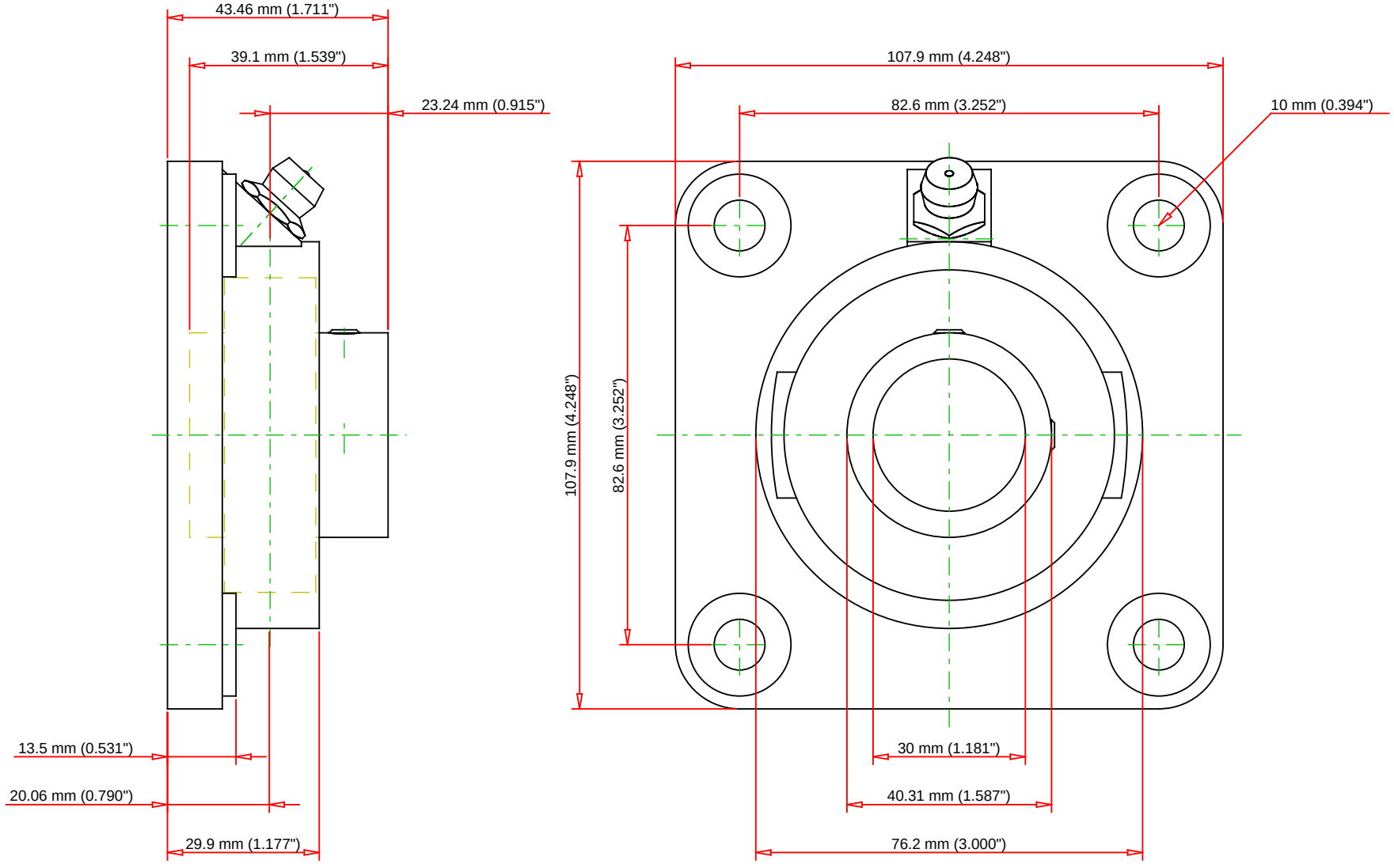

Bearing Number	GYE30KRRB SGT			
Load Ratings - C_r	4800	lbf	21600	N
Load Ratings - C_{0r}	2500	lbf	11000	N
Weight	0	lb	0	kg
Bolt Size	M6x1			

TIMKEN

THE TIMKEN COMPANY
NORTH CANTON, OHIO USA

YCJ 30 SGT

Fafnir® Four-Bolt Flanged Units Setscrew Locking

Every reasonable effort has been made to ensure the accuracy of the information contained in this writing, but no liability is accepted for errors, omissions or for any other reason.

FOR DISCUSSION ONLY