The Timken Company
4500 Mt Pleasant St. NW
N. Canton, OH 44720
Phone: (234) 262-3000
E-Mail: CustomerCAD@timken.com • **Web site:** www.timken.com

Timken Part Number VCJT 2, Two-Bolt Flanged Units Eccentric Locking Collar (Includes Industrial and Standard Series)



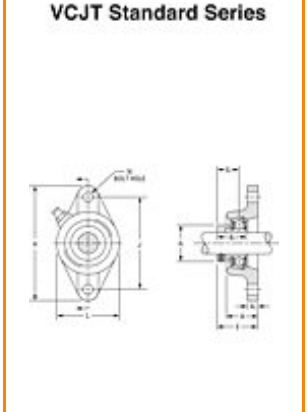

Specifications | Dimensions | Basic Load Ratings

Specifications

Bore Size d	2 in 50.8 mm
Bearing Number	GRA200RRB
Dimension E	2.673 in 67.9 mm
Inside Ring Outside Diameter	2.980 in 75.7 mm
Series	Standard
Weight	6.817 lb 3.092 Kg
Seal Type	Molded Shroud

Dimensions

Total Width A	46.8 mm 1.843 in
Total Length H	215.9 mm 8.500 in
Total Height L	127 mm 5.000 in
Bolt Hole Spacing J	184.1 mm 7.248 in
Bolt Hole Size N	17.1 mm 0.673 in
Flange Thickness A1	16.7 mm 0.657 in
Center of Bearing from Housing End A2	31.4 mm 1.236 in
Inside Ring Width B	48.4 mm 1.906 in
Center of Bearing from Bearing End S	31.4 mm 1.236 in

Basic Load Ratings

Static Load Rating	10800 lbf 48000 N
Dynamic Load Rating	6400 lbf 28500 N

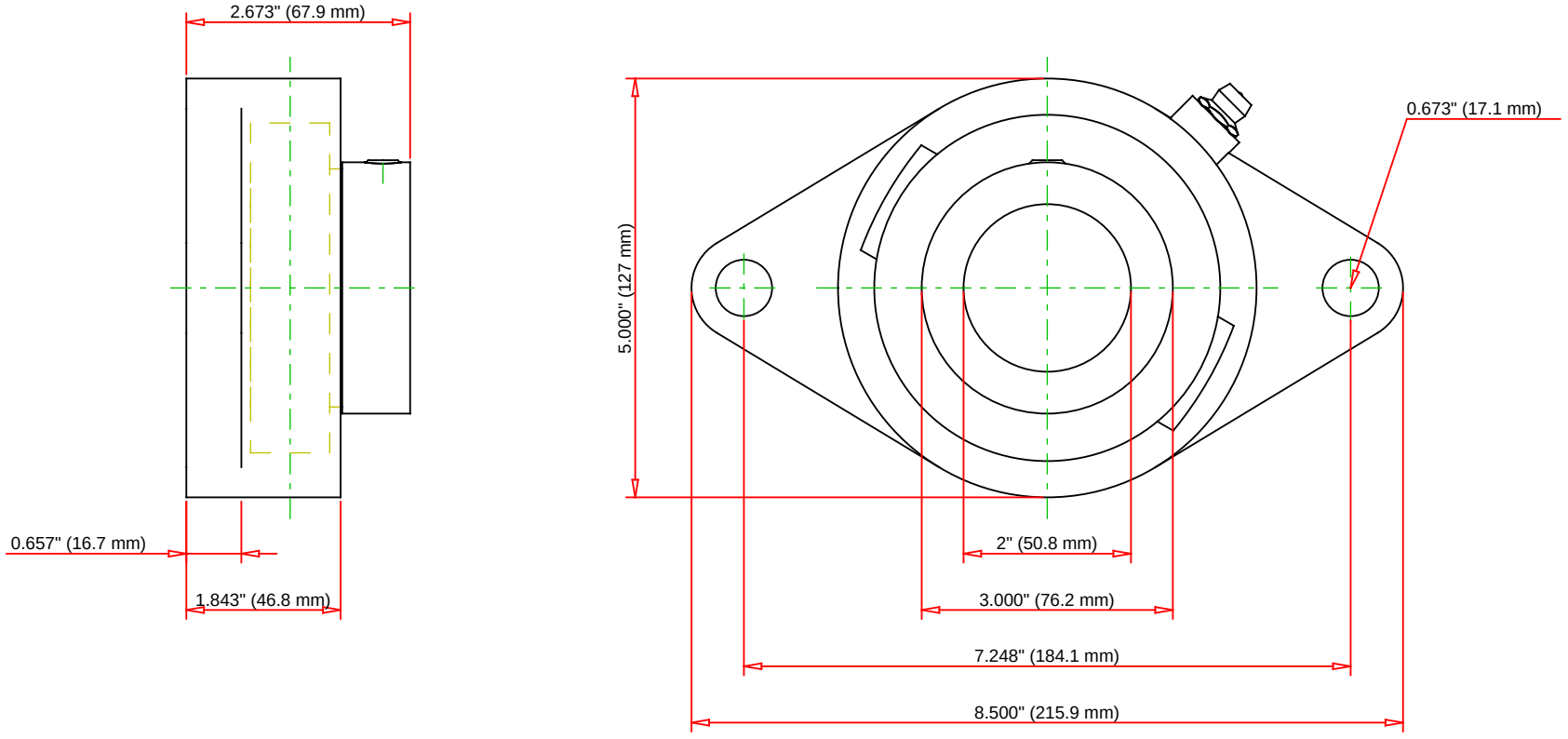

Bearing Number	GRA200RRB			
Load Ratings - C_r	10800	lbf	48000	N
Load Ratings - C_{0r}	6400	lbf	28500	N
Weight	6.817	lb	3.092	kg

TIMKEN

THE TIMKEN COMPANY
NORTH CANTON, OHIO USA

VCJT 2

Two-Bolt Flanged Units Eccentric Locking Collar
(Includes Industrial and Standard Series)

Every reasonable effort has been made to ensure the accuracy of the information contained in this writing, but no liability is accepted for errors, omissions or for any other reason.

FOR DISCUSSION ONLY