The Timken Company
4500 Mt Pleasant St. NW
N. Canton, OH 44720
Phone: (234) 262-3000
E-Mail: CustomerCAD@timken.com • **Web site:** www.timken.com

Timken Part Number 05075 - 05185, Tapered Roller Bearings - TS (Tapered Single) Imperial

This is the most basic and most widely used type of tapered roller bearing. It consists of two main separable parts: the cone (inner ring) assembly and the cup (outer ring). It is typically mounted in opposing pairs on a shaft.



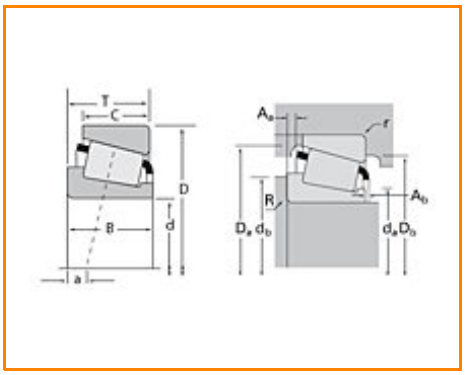

Specifications | Dimensions | Abutment and Fillet Dimensions | Basic Load Ratings | Factors

Specifications

Series	05000
Cone Part Number	05075
Cup Part Number	05185
Design Units	Imperial
Bearing Weight	0.100 Kg 0.30 lb
Cage Type	Stamped Steel

Dimensions

d - Bore	19.050 mm 0.7500 in

D - Cup Outer Diameter	47.000 mm 1.8504 in
B - Cone Width	14.381 mm 0.5662 in
C - Cup Width	11.113 mm 0.4375 in
T - Bearing Width	14.381 mm 0.5662 in

Abutment and Fillet Dimensions

R - Cone Backface "To Clear" Radius[1]	1.270 mm 0.050 in
r - Cup Backface "To Clear" Radius[2]	1.27 mm 0.050 in
da - Cone Frontface Backing Diameter	23.62 mm 0.93 in
db - Cone Backface Backing Diameter	24.89 mm 0.98 in
Da - Cup Frontface Backing Diameter	42.93 mm 1.69 in
Db - Cup Backface Backing Diameter	40.39 mm 1.59 in
Ab - Cage-Cone Frontface Clearance	1.8 mm 0.07 in
Aa - Cage-Cone Backface Clearance	-0.3 mm -0.01 in
a - Effective Center Location[3]	-4.10 mm -0.16 in

Basic Load Ratings

C90 - Dynamic Radial Rating (90 million revolutions)[4]	6930 N 1560 lbf
C1 - Dynamic Radial Rating (1 million revolutions)[5]	26700 N 6010 lbf
C0 - Static Radial Rating	25400 N 5720 lbf
C_{a90} - Dynamic Thrust Rating (90 million revolutions)[6]	4230 N 952 lbf

Factors

K - Factor[7]	1.64
e - ISO Factor[8]	0.36
Y - ISO Factor[9]	1.68
G1 - Heat Generation Factor (Roller-Raceway)	5.8
G2 - Heat Generation Factor (Rib-Roller End)	5.55
Cg - Geometry Factor	0.0448

[1] These maximum fillet radii will be cleared by the bearing corners.
[2] These maximum fillet radii will be cleared by the bearing corners.
[3] Negative value indicates effective center inside cone backface.
[4] Based on 90 x 10^6 revolutions L_{10} life, for The Timken Company life calculation method. C_{90} and C_{a90} are radial and thrust values.
[5] Based on 1 x 10^6 revolutions L_{10} life, for the ISO life calculation method.
[6] Based on 90 x 10^6 revolutions L_{10} life, for The Timken Company life calculation method. C_{90} and C_{a90} are radial and thrust values for a single-row, $C_{90(2)}$ is the two-row radial value.
[7] These factors apply for both inch and metric calculations. Consult your Timken representative for instruction on use.
[8] These factors apply for both inch and metric calculations. Consult your Timken representative for instruction on use.
[9] These factors apply for both inch and metric calculations. Consult your Timken representative for instruction on use.

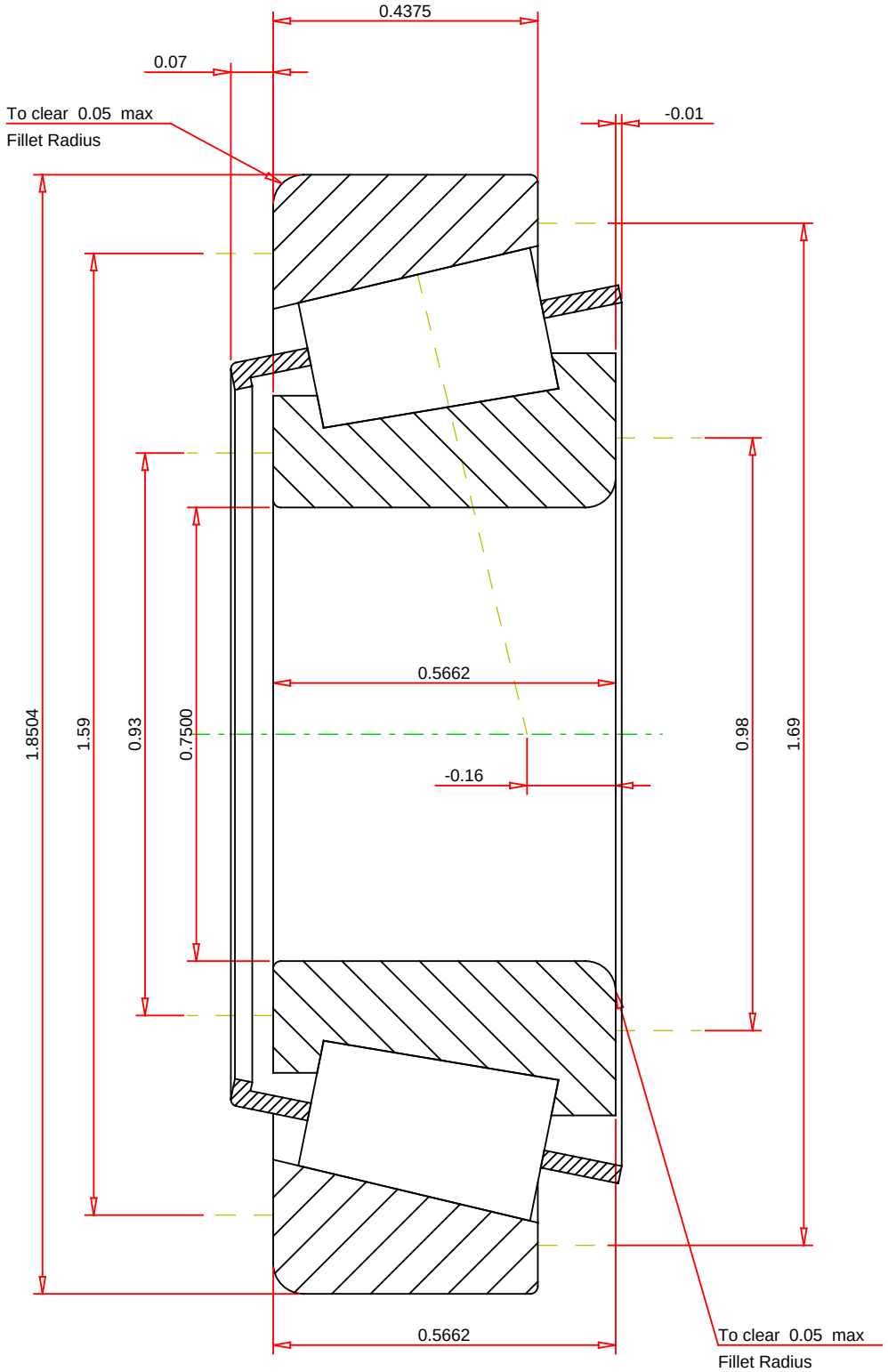

IMPERIAL UNITS

ISO Factor - e	0.36	
ISO Factor - Y	1.68	
Bearing Weight	0.3	lb
Number of Rollers Per Row	14	
Effective Center Location	-0.16	inch

TIMKEN

THE TIMKEN COMPANY
NORTH CANTON, OHIO USA

05075 - 05185
TS BEARING ASSEMBLY

K Factor	1.64	
Dynamic Radial Rating - C90	6930	lbf
Dynamic Thrust Rating - Ca90	4230	lbf
Static Radial Rating - C0	25400	lbf
Dynamic Radial Rating - C1	26700	lbf

Every reasonable effort has been made to ensure the accuracy of the information contained in this writing, but no liability is accepted for errors, omissions or for any other reason.

FOR DISCUSSION ONLY