The Timken Company
4500 Mt Pleasant St. NW
N. Canton, OH 44720
Phone: (234) 262-3000
E-Mail: CustomerCAD@timken.com • **Web site:** www.timken.com

Timken Part Number YCJ1/2, Four-Bolt Flanged Units Setscrew Locking (Includes Industrial and Standard Series)



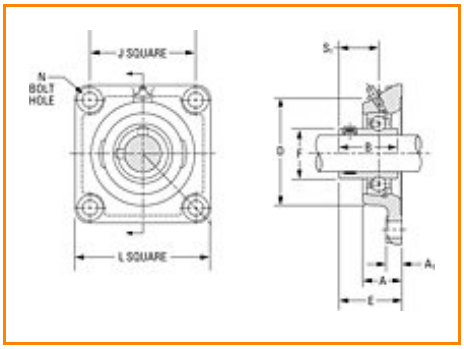

Specifications | Dimensions | Basic Load Ratings

Specifications

Bore Size d	1/2 in 12.7 mm
Bearing Number	GY1008KRRB
Dimension D	2.063 in 52.4 mm
Dimension E	1.280 in 32.5 mm
Inside Ring Outside Diameter	0.941 in 23.9 mm
Series	Industrial
Weight	1.03 lb 0.470 Kg

Seal Type	Shroud Seal

Dimensions

Total Length L	76.2 mm 3.000 in
Total Width A	0.929 in 23.6 mm
Bolt Hole Size N	10 mm 0.394 in
Flange Thickness A1	10.3 mm 0.406 in
Center of Bearing from Housing End A2	16.6 mm 0.654 in
Inside Ring Width B	N/A
Total Height	76.2 mm 3.000 in
Bolt Size	M10
Center of Bearing from Bearing End S	11.5 mm 0.453 in

Basic Load Ratings

Static Load Rating	1000 lbf 4400 N
Dynamic Load Rating	2360 lbf 10600 N

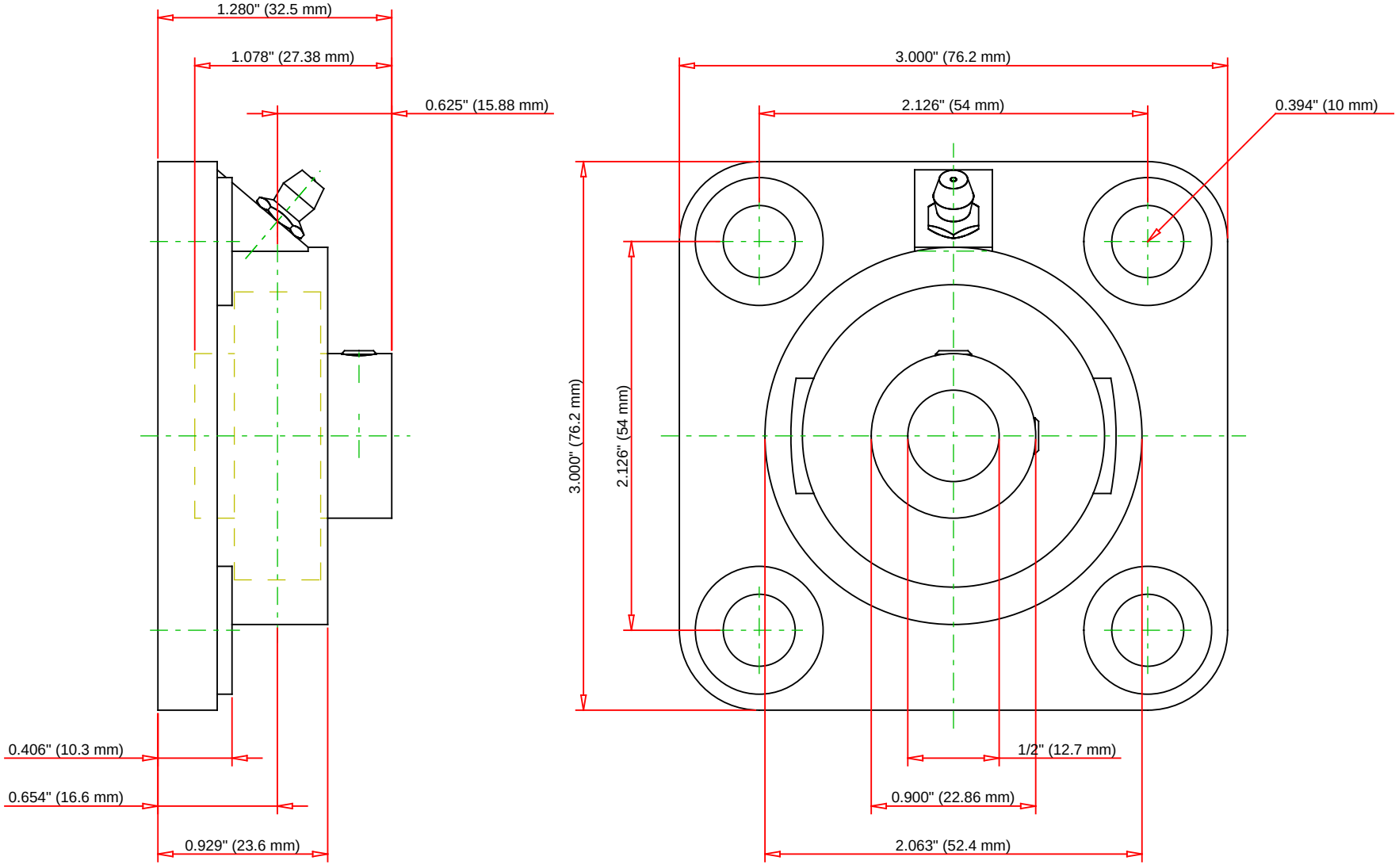

Bearing Number	GY1008KRRB				
Load Ratings - C_r	2360	lbf	10600	N	
Load Ratings - C_{0r}	1000	lbf	4400	N	
Weight	0	lb	0	kg	
Bolt Size	M5x0.8				

TIMKEN

THE TIMKEN COMPANY
NORTH CANTON, OHIO USA

YCJ1/2

Four-Bolt Flanged Units Setscrew Locking
(Includes Industrial and Standard Series)

Every reasonable effort has been made to ensure the accuracy of the information contained in this writing, but no liability is accepted for errors, omissions or for any other reason.

FOR DISCUSSION ONLY