The Timken Company
4500 Mt Pleasant St. NW
N. Canton, OH 44720
Phone: (234) 262-3000
E-Mail: CustomerCAD@timken.com • **Web site:** www.timken.com

Timken Part Number VAS 2 3/16, Pillow Block Units Eccentric Locking Collar (Includes Industrial and Standard Series)



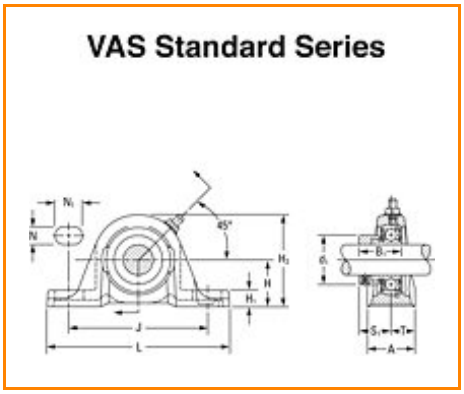

Specifications | Dimensions | Basic Load Ratings

Specifications

Bore Size d	2 3/16 in 55.6 mm
Bearing Number	GRA203RRB
Inside Ring Outside Diameter	0.811 in 20.6 mm
Dimension B1	1.906 in 48.4 mm
Dimension T	1.157 in 29.4 mm
Series	Standard
Weight	7.337 lb 3.328 Kg
Seal Type	Molded Shroud

Dimensions

Shaft Height H	63.5 mm 2.500 in
Total Length L	222.3 mm 8.752 in
Total Width A	2.311 in 58.7 mm
Bolt Hole Spacing J	176.2 mm 6.937 in
Bolt Hole Width N	18.3 mm 0.720 in
Bolt Hole Length N1	29.4 mm 1.157 in
Base Height H1	20.6 mm 0.811 in
Total Height H2	126.2 mm 4.969 in
Dimension L1	74.1 mm 2.917 in
Inside Ring Width B	N/A
Center of Bearing from End S	11.9 mm 0.469 in

Basic Load Ratings

Static Load Rating	6400 lbf 28500 N
Dynamic Load Rating	10800 lbf 48000 N

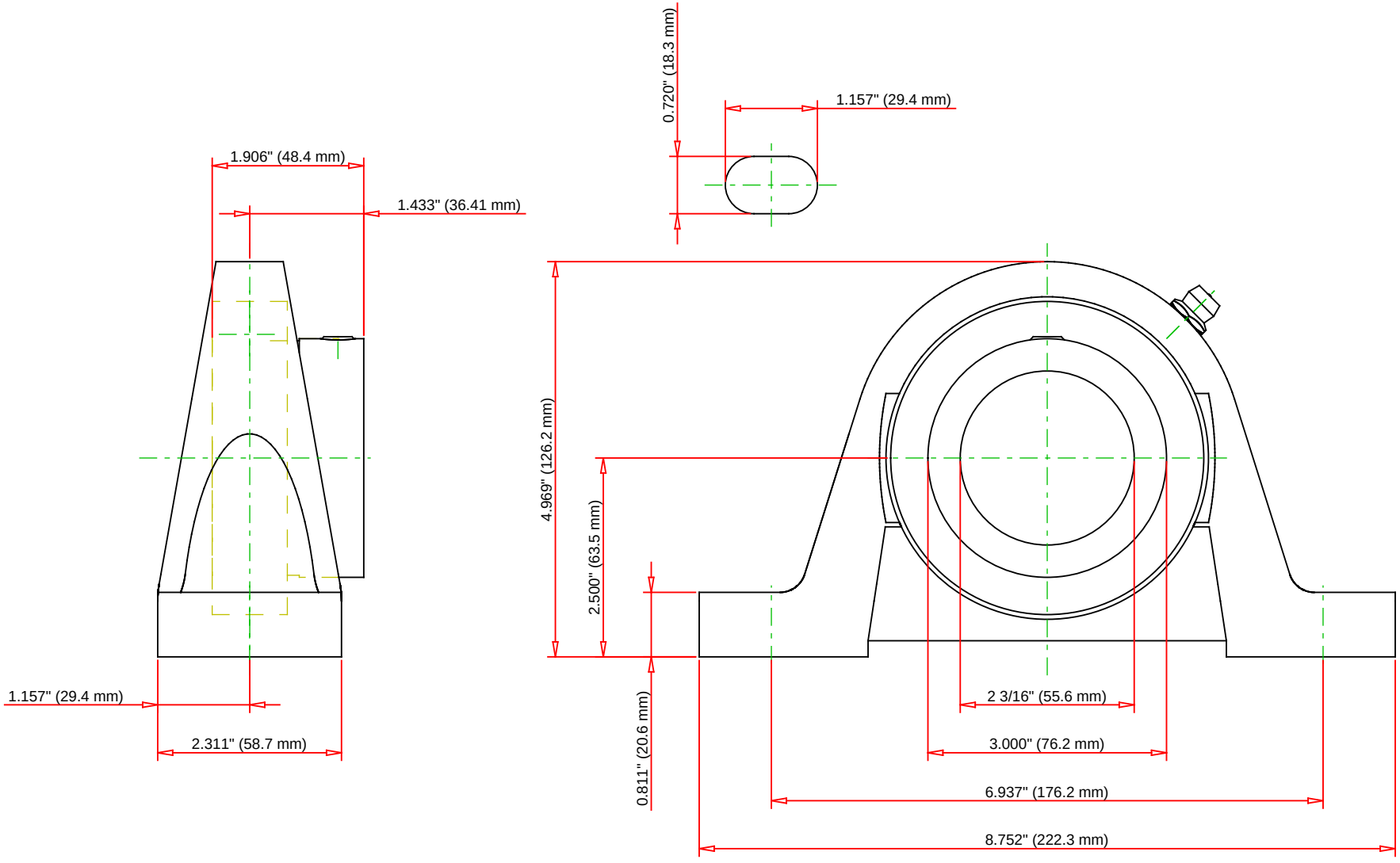

Bearing Number	GRA203RRB			
Load Ratings - C_r	10800	lbf	48000	N
Load Ratings - C_{0r}	6400	lbf	28500	N
Weight	7.337	lb	3.328	kg

TIMKEN

THE TIMKEN COMPANY
NORTH CANTON, OHIO USA

VAS 2 3/16

Pillow Block Units Eccentric Locking Collar
(Includes Industrial and Standard Series)

Every reasonable effort has been made to ensure the accuracy of the information contained in this writing, but no liability is accepted for errors, omissions or for any other reason.

FOR DISCUSSION ONLY