The Timken Company
4500 Mt Pleasant St. NW
N. Canton, OH 44720
Phone: (234) 262-3000
E-Mail: CustomerCAD@timken.com • **Web site:** www.timken.com

Timken Part Number YCJM2 7/16, Four-Bolt Flanged Units Setscrew Locking (Includes Industrial and Standard Series)



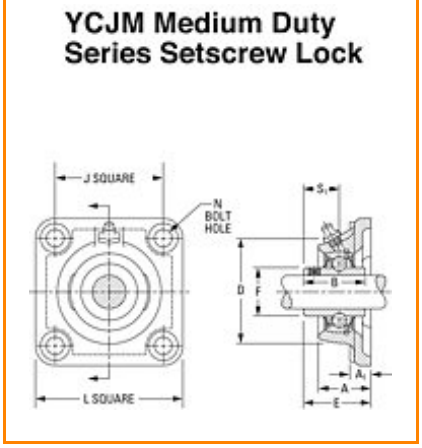

Specifications | Dimensions | Basic Load Ratings

Specifications

Bore Size d	2 7/16 in 61.9 mm
Bearing Number	GYM1207KRRB
Dimension D	6.000 in 152.4 mm
Dimension E	3.209 in 81.5 mm
Inside Ring Outside Diameter	3.422 in 86.92 mm
Series	Medium-Duty
Weight	15.04 lb 6.82 Kg

Seal Type	Shroud Seal

Dimensions

Total Length L	187.3 mm 7.374 in
Total Width A	2.500 in 63.5 mm
Bolt Hole Size N	16 mm 0.630 in
Flange Thickness A1	19 mm 0.748 in
Center of Bearing from Housing End A2	38.6 mm 1.520 in
Inside Ring Width B	N/A
Total Height	187.3 mm 7.374 in
Bolt Size	M16
Center of Bearing from Bearing End S	27 mm 1.063 in

Basic Load Ratings

Static Load Rating	9650 lbf 43000 N
Dynamic Load Rating	15600 lbf 69500 N

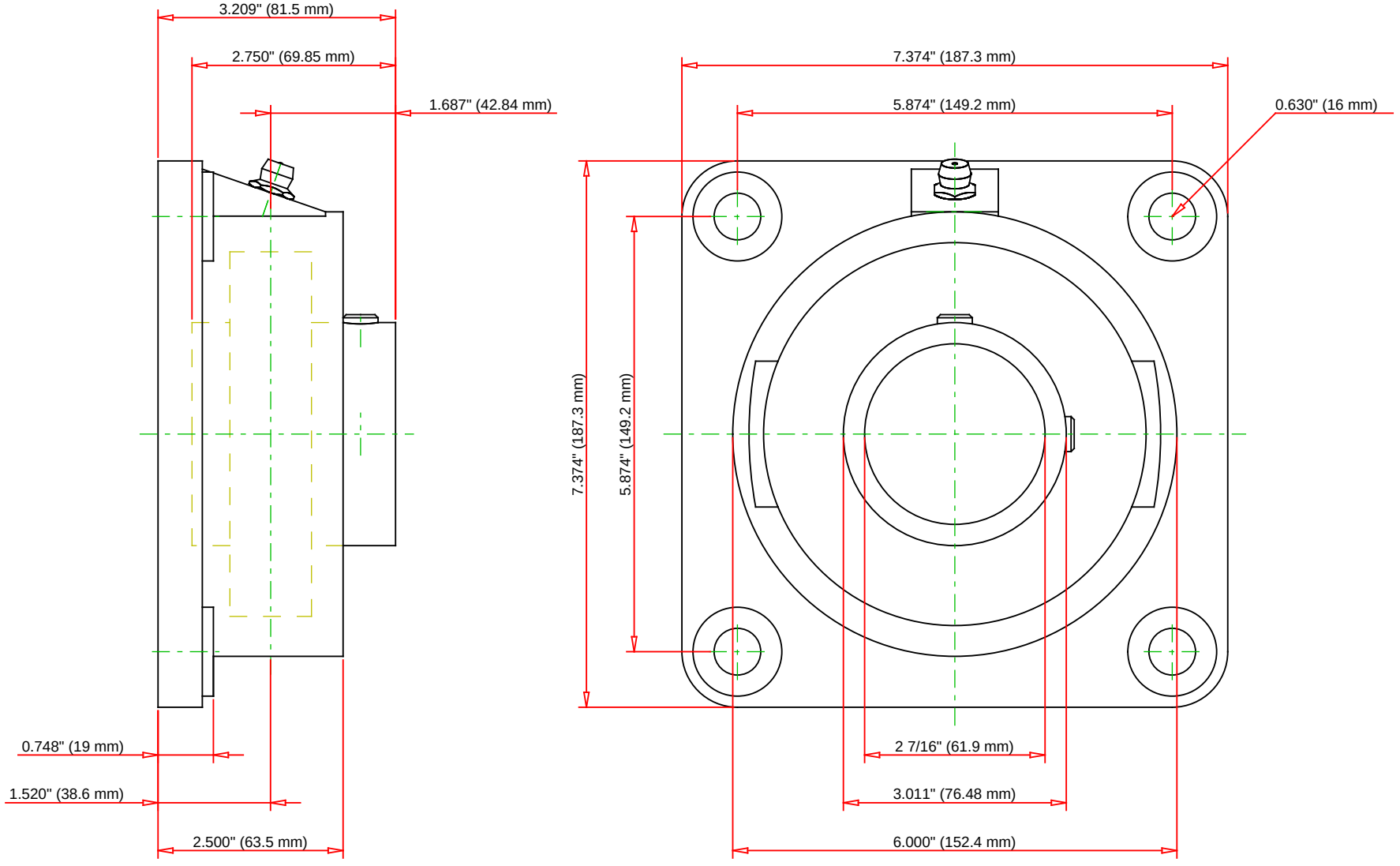

Bearing Number	GYM1207KRRB			
Load Ratings - C_r	15600	lbf	69500	N
Load Ratings - C_{0r}	9650	lbf	43000	N
Weight	0	lb	0	kg
Bolt Size	M12x1.75			

TIMKEN

THE TIMKEN COMPANY
NORTH CANTON, OHIO USA

YCJM2 7/16

Four-Bolt Flanged Units Setscrew Locking
(Includes Industrial and Standard Series)

Every reasonable effort has been made to ensure the accuracy of the information contained in this writing, but no liability is accepted for errors, omissions or for any other reason.

FOR DISCUSSION ONLY