The Timken Company
4500 Mt Pleasant St. NW
N. Canton, OH 44720
Phone: (234) 262-3000
E-Mail: CustomerCAD@timken.com • **Web site:** www.timken.com

Part Number VAK 1 11/16, Fafnir® Pillow Block Units Eccentric Locking Collar



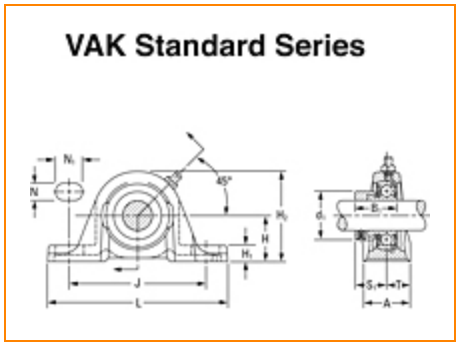

Specifications | Dimensions | Basic Load Ratings

Specifications

Shaft Size d	1 11/16 in 42.9 mm
Bearing Type	Ball Bearing
Bearing Number	GRA111RRB
Dimension T	1.000 in 25.4 mm
Series	Standard
Weight	4.985 lb 2.261 Kg
Seal Type	Molded Shroud
Housing Construction	Two-Bolt Pillow Block
Alternate Part Name	VAK1 11/16

Dimensions

Base to Center Height H	52.39 mm 2.063 in
Total Length L	191.3 mm 7.531 in
Total Width A	2.0000 in 50.800 mm
Bolt Hole Spacing J	149.2 mm 5.874 in
Bolt Hole Width N	14.3 mm 0.563 in
Bolt Hole Length N1	28.6 mm 1.126 in
Foot Height H1	17.5 mm
Total Height H2	104.8 mm 4.126 in
Dimension L1	63.8 mm 2.512 in
Inside Ring Width B	N/A
Center of Bearing from End S	11.2 mm 0.441 in
Dimension B1	1.72 in 43.7 mm

Basic Load Ratings

Static Load Rating	4600 lbf 20500 N
Dynamic Load Rating	8160 lbf 36300 N

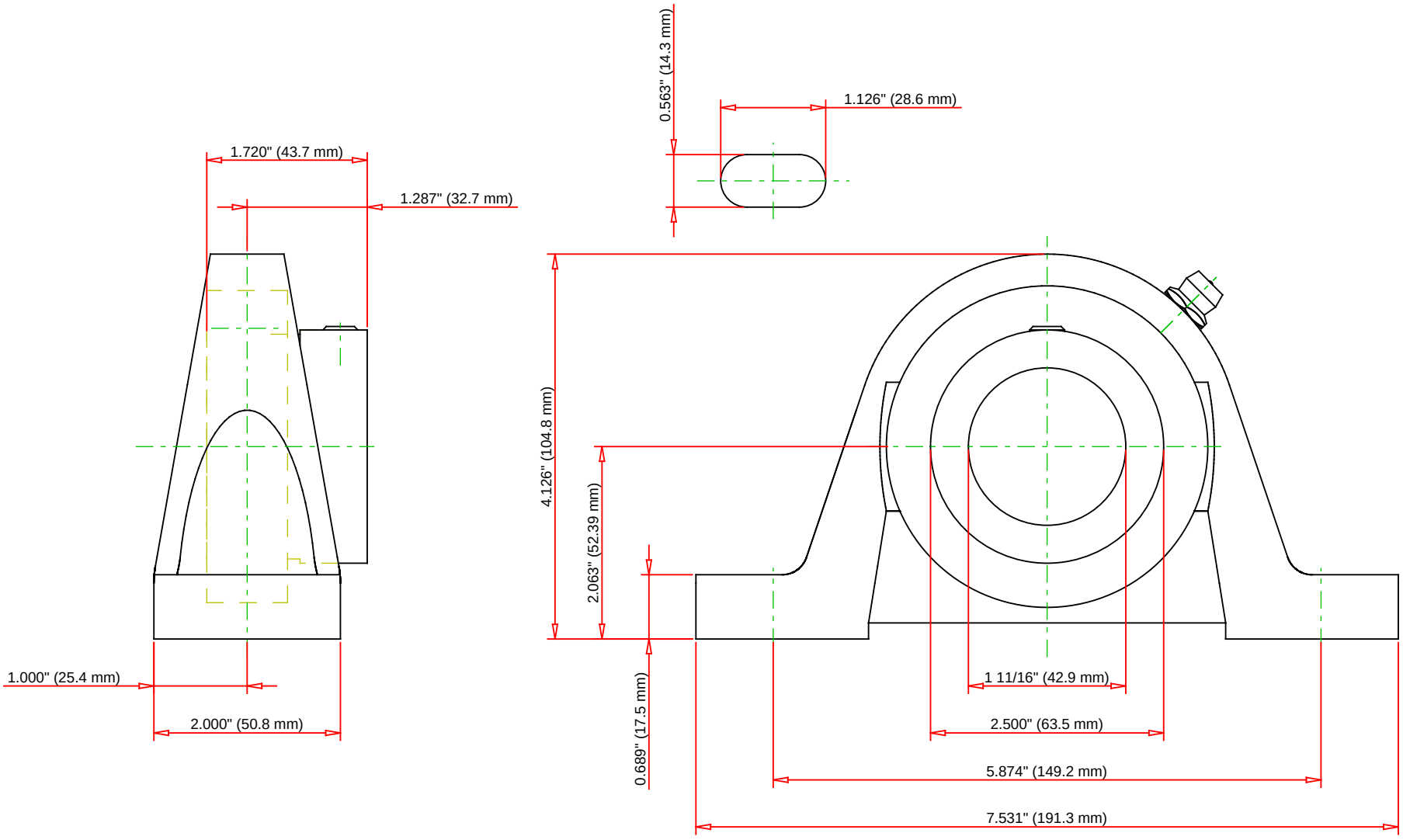

Bearing Number	GRA111RRB			
Load Ratings - C_r	8160	lbf	36300	N
Load Ratings - C_{0r}	4600	lbf	20500	N
Weight	4.985	lb	2.261	kg

TIMKEN

THE TIMKEN COMPANY
NORTH CANTON, OHIO USA

VAK 1 11/16

Fafnir® Pillow Block Units Eccentric Locking Collar

Every reasonable effort has been made to ensure the accuracy of the information contained in this writing, but no liability is accepted for errors, omissions or for any other reason.

FOR DISCUSSION ONLY