The Timken Company
4500 Mt Pleasant St. NW
N. Canton, OH 44720
Phone: (234) 262-3000
E-Mail: CustomerCAD@timken.com • **Web site:** www.timken.com

Timken Part Number SDAF 22338, Inch Straight Bore Mounting Pillow Block SDAF222 and SDAF223 Series

- Each assembly includes the housing cap and base, cap bolts, bearing, locknut and washer, stabilizing ring, and triple ring seals.
- To order pillow block housing only, use the numbers listed in the "Housing Only" column. These units include: cap, base, cap bolts, triple ring seals and stabilizing ring.
- Assembly and pillow blocks described on this page constitute fixed units.
- To order float units, specify part number plus suffix "Float" or "FL".
- If one end closed assembly is required, specify “CL”

more

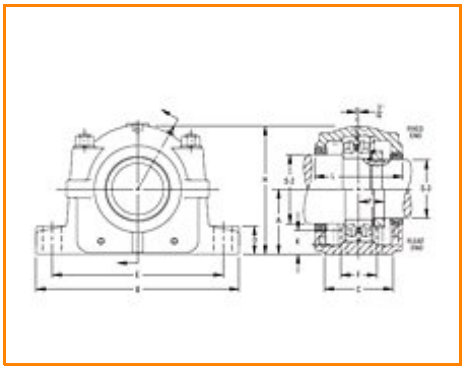

Specifications

Bearing Number	22338
Diameter S-2	8 3/8 in
Diameter S-3	7 1/4 in
A	9.5000 in
B	32.0000 in
C	11.2500 in
D	3.5000 in

E Max.	27.8750 in
E Min.	25.6250 in
F	7.25 in
H[1]	19.2500 in
Oil Level K	3.6875 in
L[2]	11.813 in
Y	3.8906 in
No. of Base Bolts Required	4
Bolt Hole Length	2.625 in
Bolt Hole Width	1.5 in
Size of Base Bolts Required	1.5 in
Locknut	AN38
Lockwasher	W38
Housing Only[3]	SDAF338
Stabilizing Ring 1 Req'd[4]	SR-44-38
Triple Seal 2 Req'd at S-2	LER240
Triple Seal 2 Req'd at S-3	LER229
Assembly Weight	700.000 lb

[1] Tolerance -0 to + 0.4 mm (-0 to +1/64 in)

[2] Tolerance -0 to + 0.4 mm (-0 to +1/64 in)

[3] "Housing Only" includes: cap, base, cap bolts, triple ring seals and stabilizing ring as required. When ordering non-standard housing only specify the shaft size.

[4] Stabilizing ring is used for fixed (FX) block; do not use for float (FL) mounting.

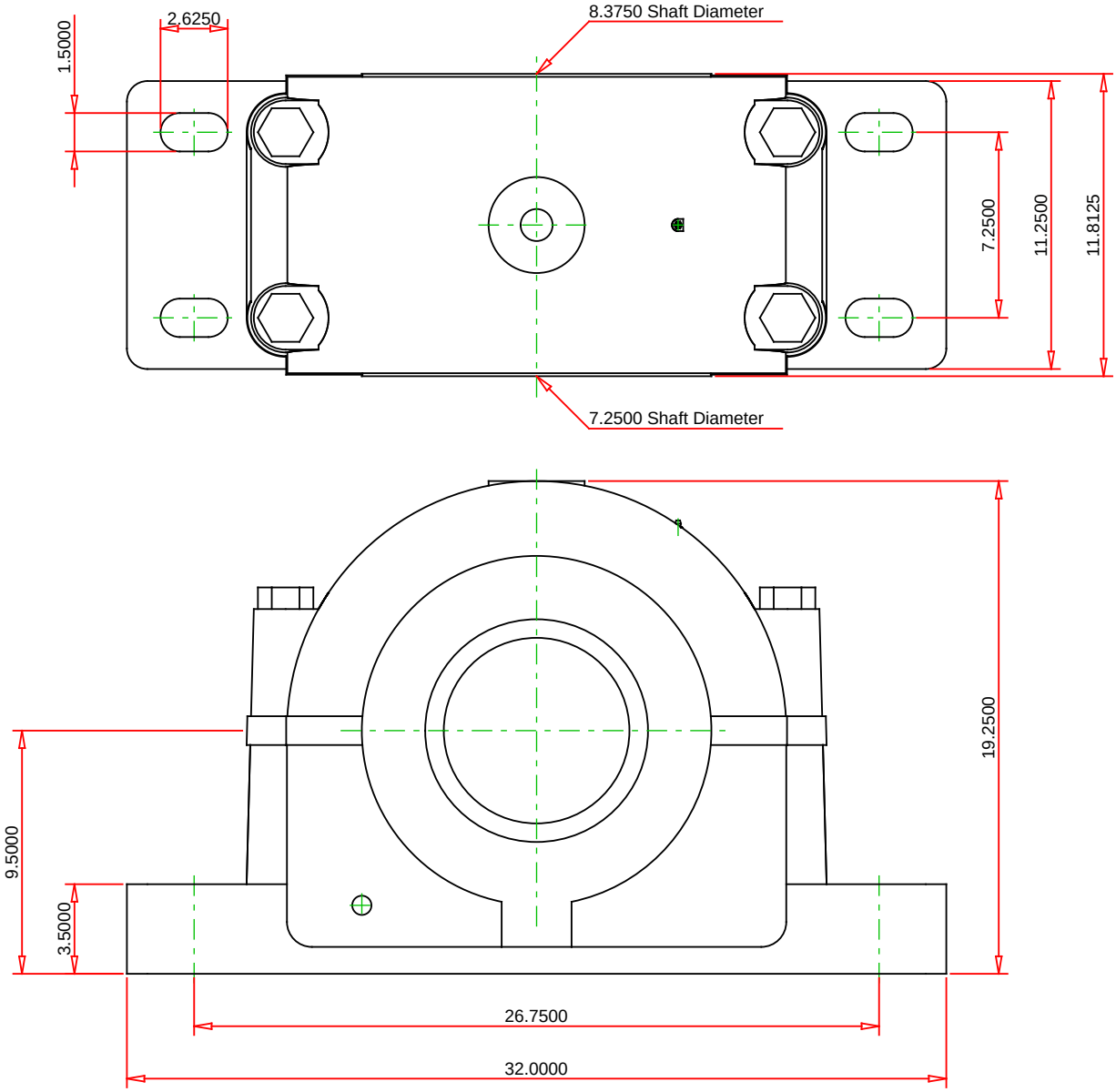

IMPERIAL UNITS

Housing	SDAF338
Bearing	22338
Triple Seal at S-2	LER240
Triple Seal at S-3	LER229
Stabilizing Ring	SR-44-38
Locknut	AN38
Lockwasher	W38
Bolt Hole Spacing Max.	27.8750
Bolt Hole Spacing Min.	25.6250

TIMKEN®

THE TIMKEN COMPANY
NORTH CANTON, OHIO USA

SDAF 22338
PILLOW BLOCK SDAF222 AND SDAF223

Every reasonable effort has been made to ensure the accuracy of the information contained in this writing, but no liability is accepted for errors, omissions or for any other reason.

FOR DISCUSSION ONLY