The Timken Company
4500 Mt Pleasant St. NW
N. Canton, OH 44720
Phone: (234) 262-3000
E-Mail: CustomerCAD@timken.com • **Web site:** www.timken.com

Timken Part Number VAK 1 1/2, Pillow Block Units Eccentric Locking Collar (Includes Industrial and Standard Series)



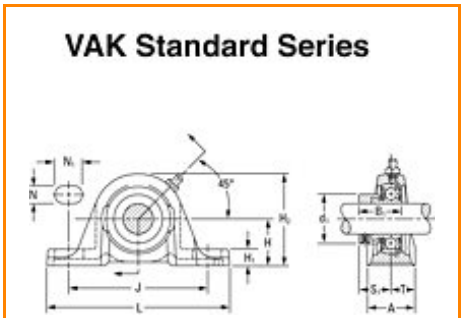

Specifications | Dimensions | Basic Load Ratings

Specifications

Bore Size d	1 1/2 in 38.1 mm
Bearing Number	GRA108RRB
Inside Ring Outside Diameter	0.720 in 18.3 mm
Dimension B1	1.720 in 43.7 mm
Dimension T	0.937 in 23.8 mm
Series	Standard
Weight	4.484 lb 2.034 Kg
Seal Type	Molded Shroud

Dimensions

Shaft Height H	49.21 mm 1.937 in
Total Length L	179.4 mm 7.063 in
Total Width A	1.874 in 47.6 mm
Bolt Hole Spacing J	136.5 mm 5.374 in
Bolt Hole Width N	14.3 mm 0.563 in
Bolt Hole Length N1	26.2 mm 1.031 in
Base Height H1	19 mm 0.748 in
Total Height H2	100 mm 3.937 in
Dimension L1	59.8 mm 2.354 in
Inside Ring Width B	N/A
Center of Bearing from End S	11.2 mm 0.441 in

Basic Load Ratings

Static Load Rating	4400 lbf 19600 N
Dynamic Load Rating	8100 lbf 36000 N

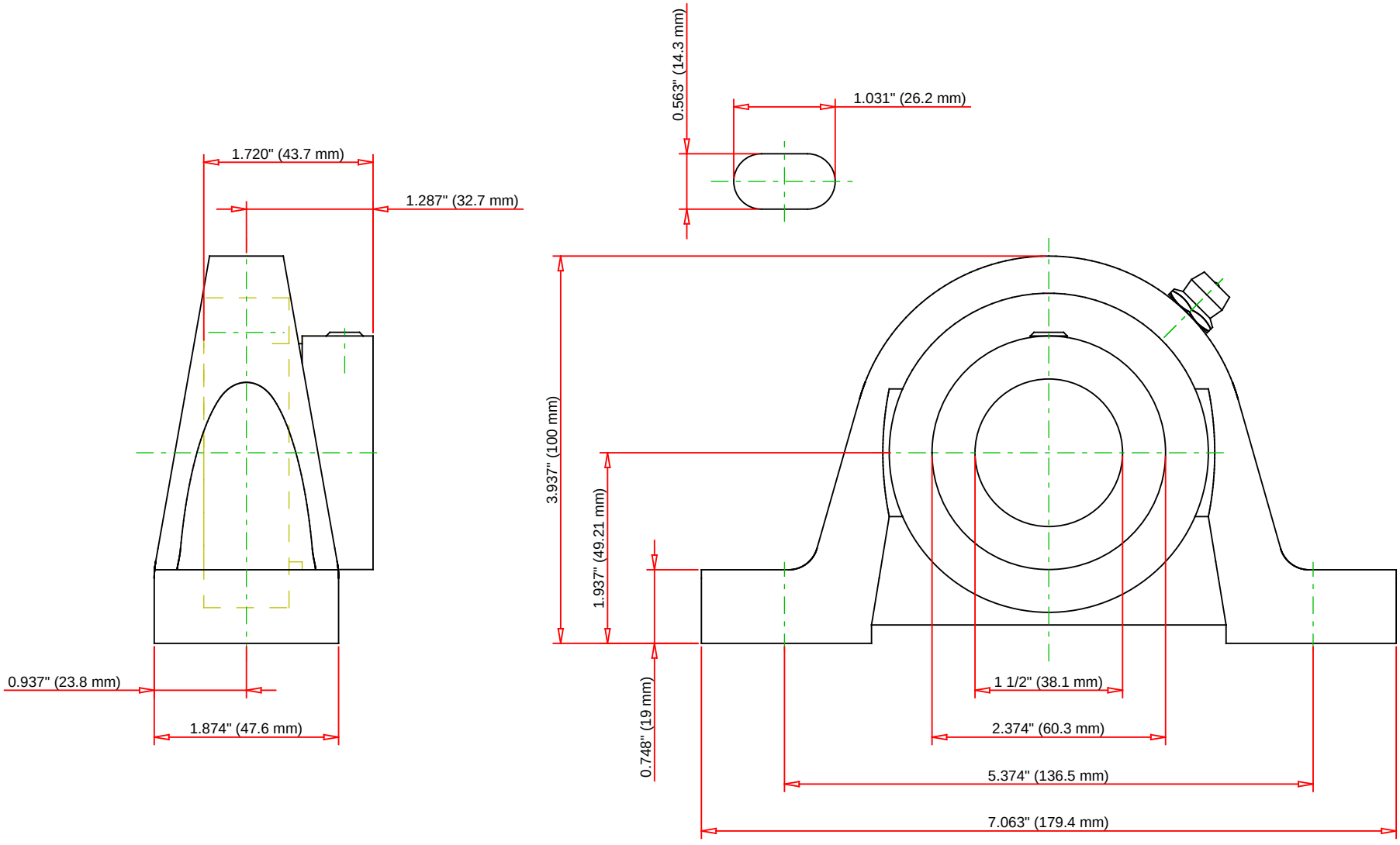

Bearing Number	GRA108RRB				
Load Ratings - C_r	8150	lbf	36000	N	
Load Ratings - C_{0r}	4400	lbf	19600	N	
Weight	4.484	lb	2.034	kg	

TIMKEN

THE TIMKEN COMPANY
NORTH CANTON, OHIO USA

VAK 1 1/2

Pillow Block Units Eccentric Locking Collar
(Includes Industrial and Standard Series)

Every reasonable effort has been made to ensure the accuracy of the information contained in this writing, but no liability is accepted for errors, omissions or for any other reason.

FOR DISCUSSION ONLY