The Timken Company
4500 Mt Pleasant St. NW
N. Canton, OH 44720
Phone: (234) 262-3000
E-Mail: CustomerCAD@timken.com • **Web site:** www.timken.com

Timken Part Number H852849 - H852810, Tapered Roller Bearings - TS (Tapered Single) Imperial

This is the most basic and most widely used type of tapered roller bearing. It consists of two main separable parts: the cone (inner ring) assembly and the cup (outer ring). It is typically mounted in opposing pairs on a shaft.



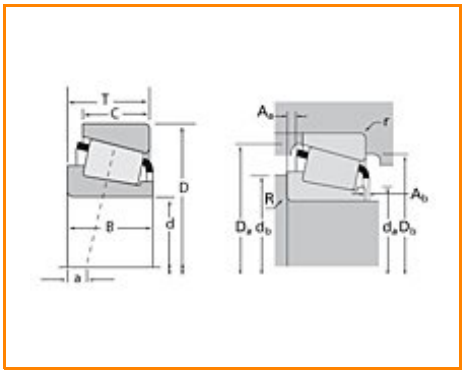

Specifications | Dimensions | Abutment and Fillet Dimensions | Basic Load Ratings | Factors

Specifications

Series	H852800
Cone Part Number	H852849
Cup Part Number	H852810
Design Units	Imperial
Bearing Weight	72.40 Kg 159.60 lb
Cage Type	Stamped Steel

Dimensions

d - Bore	266.7 mm 10.5 in
D - Cup Outer Diameter	444.5 mm 17.5 in
B - Cone Width	117.475 mm 4.6250 in
C - Cup Width	88.900 mm 3.5000 in
T - Bearing Width	120.650 mm 4.7500 in

Abutment and Fillet Dimensions

R - Cone Backface "To Clear" Radius[1]	6.35 mm 0.25 in
r - Cup Backface "To Clear" Radius[2]	6.35 mm 0.250 in
da - Cone Frontface Backing Diameter	296.93 mm 12.95 in
db - Cone Backface Backing Diameter	314.96 mm 12.4 in
Da - Cup Frontface Backing Diameter	423.93 mm 16.69 in
Db - Cup Backface Backing Diameter	389.89 mm 15.35 in
Ab - Cage-Cone Frontface Clearance	5.6 mm 0.22 in
Aa - Cage-Cone Backface Clearance	18 mm 0.71 in
a - Effective Center Location[3]	-0.50 mm -0.02 in

Basic Load Ratings

C90 - Dynamic Radial Rating (90 million revolutions)[4]	473000 N 106000 lbf
C1 - Dynamic Radial Rating (1 million revolutions)[5]	1820000 N 410000 lbf
C0 - Static Radial Rating	3520000 N 791000 lbf
C_{a90} - Dynamic Thrust Rating (90 million revolutions)[6]	466000 N 105000 lbf

Factors

K - Factor[7]	1.01
e - ISO Factor[8]	0.58
Y - ISO Factor[9]	1.04
G1 - Heat Generation Factor (Roller-Raceway)	2250
G2 - Heat Generation Factor (Rib-Roller End)	171
Cg - Geometry Factor	0.204

[1] These maximum fillet radii will be cleared by the bearing corners.

[2] These maximum fillet radii will be cleared by the bearing corners.

[3] Negative value indicates effective center inside cone backface.

[4] Based on 90 x 10^6 revolutions L_{10} life, for The Timken Company life calculation method. C_{90} and C_{a90} are radial and thrust values.

[5] Based on 1 x 10^6 revolutions L_{10} life, for the ISO life calculation method.

[6] Based on 90 x 10^6 revolutions L_{10} life, for The Timken Company life calculation method. C_{90} and C_{a90} are radial and thrust values for a single-row, $C_{90(2)}$ is the two-row radial value.

[7] These factors apply for both inch and metric calculations. Consult your Timken representative for instruction on use.

[8] These factors apply for both inch and metric calculations. Consult your Timken representative for instruction

on use.

[9] These factors apply for both inch and metric calculations. Consult your Timken representative for instruction on use.

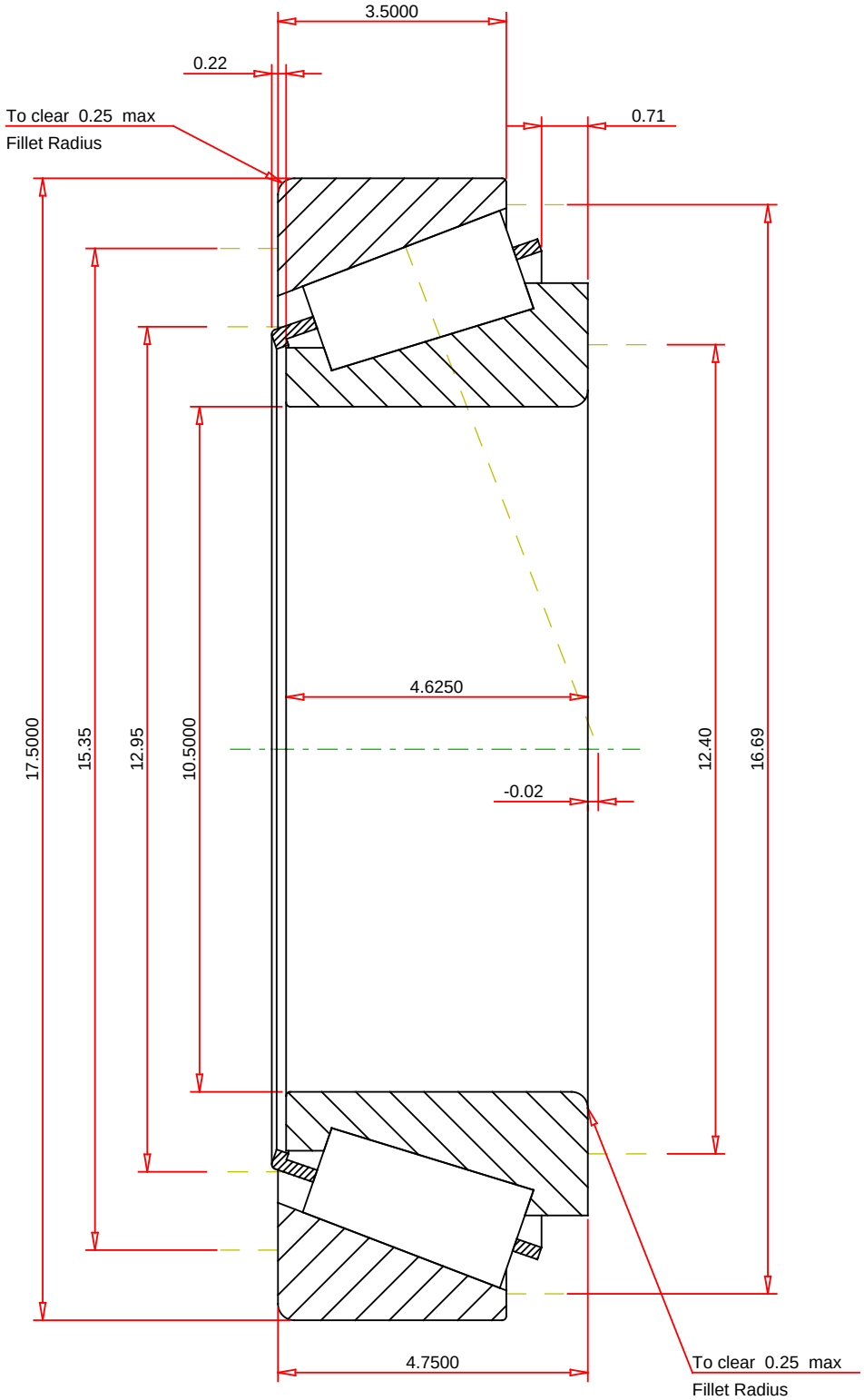

IMPERIAL UNITS

ISO Factor - e	0.58	
ISO Factor - Y	1.04	
Bearing Weight	159.6	lb
Number of Rollers Per Row	26	
Effective Center Location	-0.02	inch

TIMKEN

THE TIMKEN COMPANY
NORTH CANTON, OHIO USA

H852849 - H852810
TS BEARING ASSEMBLY

K Factor	1.01	
Dynamic Radial Rating - C90	473000	lbf
Dynamic Thrust Rating - Ca90	466000	lbf
Static Radial Rating - C0	3520000	lbf
Dynamic Radial Rating - C1	1820000	lbf

Every reasonable effort has been made to ensure the accuracy of the information contained in this writing, but no liability is accepted for errors, omissions or for any other reason.

FOR DISCUSSION ONLY