The Timken Company
4500 Mt Pleasant St. NW
N. Canton, OH 44720
Phone: (234) 262-3000
E-Mail: CustomerCAD@timken.com • **Web site:** www.timken.com

Timken Part Number VCJT 3/4, Two-Bolt Flanged Units Eccentric Locking Collar (Includes Industrial and Standard Series)



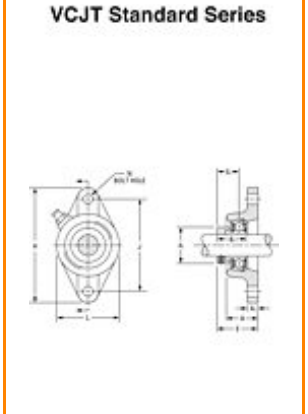

Specifications | Dimensions | Basic Load Ratings

Specifications

Bore Size d	3/4 in 19.1 mm
Bearing Number	GRA012RRB
Dimension E	1.705 in 43.3 mm
Inside Ring Outside Diameter	1.291 in 32.8 mm
Series	Standard
Weight	1.142 lb 0.518 Kg
Seal Type	Molded Shroud

Dimensions

Total Width A	27.8 mm 1.094 in
Total Length H	111.9 mm 4.406 in
Total Height L	60.3 mm 2.374 in
Bolt Hole Spacing J	89.7 mm 3.531 in
Bolt Hole Size N	9.9 mm 0.390 in
Flange Thickness A1	11.1 mm 0.437 in
Center of Bearing from Housing End A2	19.9 mm 0.783 in
Inside Ring Width B	31 mm 1.220 in
Center of Bearing from Bearing End S	19.9 mm 0.783 in

Basic Load Ratings

Static Load Rating	3200 lbf 14300 N
Dynamic Load Rating	1400 lbf 6200 N

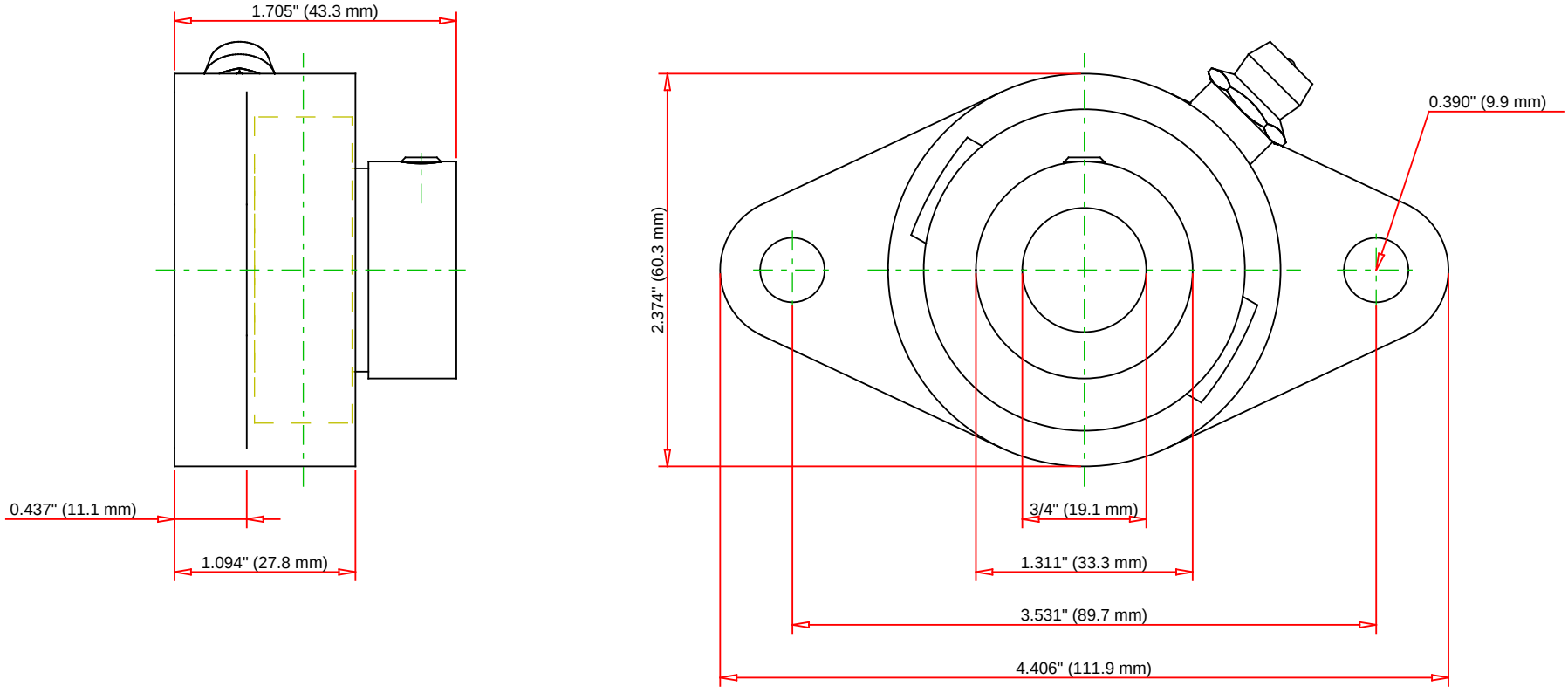

Bearing Number	GRA012RRB				
Load Ratings - C_r	3200	lbf	14300	N	
Load Ratings - C_{0r}	1400	lbf	6200	N	
Weight	1.142	lb	0.518	kg	

TIMKEN

THE TIMKEN COMPANY
NORTH CANTON, OHIO USA

VCJT 3/4

Two-Bolt Flanged Units Eccentric Locking Collar
(Includes Industrial and Standard Series)

Every reasonable effort has been made to ensure the accuracy of the information contained in this writing, but no liability is accepted for errors, omissions or for any other reason.

FOR DISCUSSION ONLY