The Timken Company
4500 Mt Pleasant St. NW
N. Canton, OH 44720
Phone: (234) 262-3000
E-Mail: CustomerCAD@timken.com • **Web site:** www.timken.com

Timken Part Number X30304 - Y30304, Tapered Roller Bearings - TS (Tapered Single) Metric

This is the most basic and most widely used type of tapered roller bearing. It consists of two main separable parts: the cone (inner ring) assembly and the cup (outer ring). It is typically mounted in opposing pairs on a shaft.



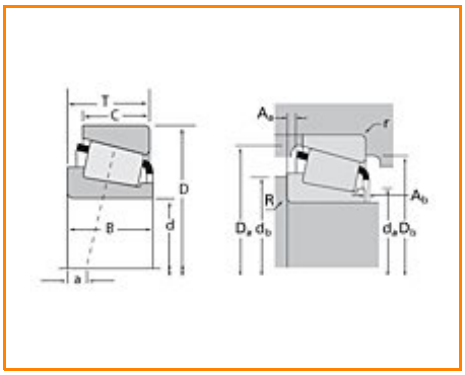

Specifications | Dimensions | Abutment and Fillet Dimensions | Basic Load Ratings | Factors

Specifications

Series	30304
Cone Part Number	X30304
Cup Part Number	Y30304
Design Units	METRIC
Bearing Weight	0.200 Kg 0.4 lb
Cage Type	Stamped Steel

Dimensions

d - Bore	20.000 mm 0.7874 in

D - Cup Outer Diameter	52.000 mm 2.0472 in
B - Cone Width	15.000 mm 0.5906 in
C - Cup Width	13.000 mm 0.5118 in
T - Bearing Width	16.250 mm 0.6398 in

Abutment and Fillet Dimensions

R - Cone Backface "To Clear" Radius[1]	1.520 mm 0.06 in
r - Cup Backface "To Clear" Radius[2]	1.52 mm 0.06 in
da - Cone Frontface Backing Diameter	24.38 mm 0.96 in
db - Cone Backface Backing Diameter	26.92 mm 1.06 in
Da - Cup Frontface Backing Diameter	48.01 mm 1.89 in
Db - Cup Backface Backing Diameter	45.47 mm 1.79 in
Ab - Cage-Cone Frontface Clearance	3.3 mm 0.13 in
Aa - Cage-Cone Backface Clearance	-1 mm -0.04 in
a - Effective Center Location[3]	-4.8 mm -0.19 in

Basic Load Ratings

C90 - Dynamic Radial Rating (90 million revolutions)[4]	9980 N 2240 lbf
C1 - Dynamic Radial Rating (1 million revolutions)[5]	38500 N 8660 lbf
C0 - Static Radial Rating	34500 N 7760 lbf
C_{a90} - Dynamic Thrust Rating (90 million revolutions)[6]	5130 N 1150 lbf

Factors

K - Factor[7]	1.95
e - ISO Factor[8]	0.3
Y - ISO Factor[9]	2
G1 - Heat Generation Factor (Roller-Raceway)	7.5
G2 - Heat Generation Factor (Rib-Roller End)	5.5
Cg - Geometry Factor	0.0458

[1] These maximum fillet radii will be cleared by the bearing corners.
[2] These maximum fillet radii will be cleared by the bearing corners.
[3] Negative value indicates effective center inside cone backface.
[4] Based on 90 x 10^6 revolutions L_{10} life, for The Timken Company life calculation method. C_{90} and C_{a90} are radial and thrust values.
[5] Based on 1 x 10^6 revolutions L_{10} life, for the ISO life calculation method.
[6] Based on 90 x 10^6 revolutions L_{10} life, for The Timken Company life calculation method. C_{90} and C_{a90} are radial and thrust values for a single-row, $C_{90(2)}$ is the two-row radial value.
[7] These factors apply for both inch and metric calculations. Consult your Timken representative for instruction on use.
[8] These factors apply for both inch and metric calculations. Consult your Timken representative for instruction on use.
[9] These factors apply for both inch and metric calculations. Consult your Timken representative for instruction on use.

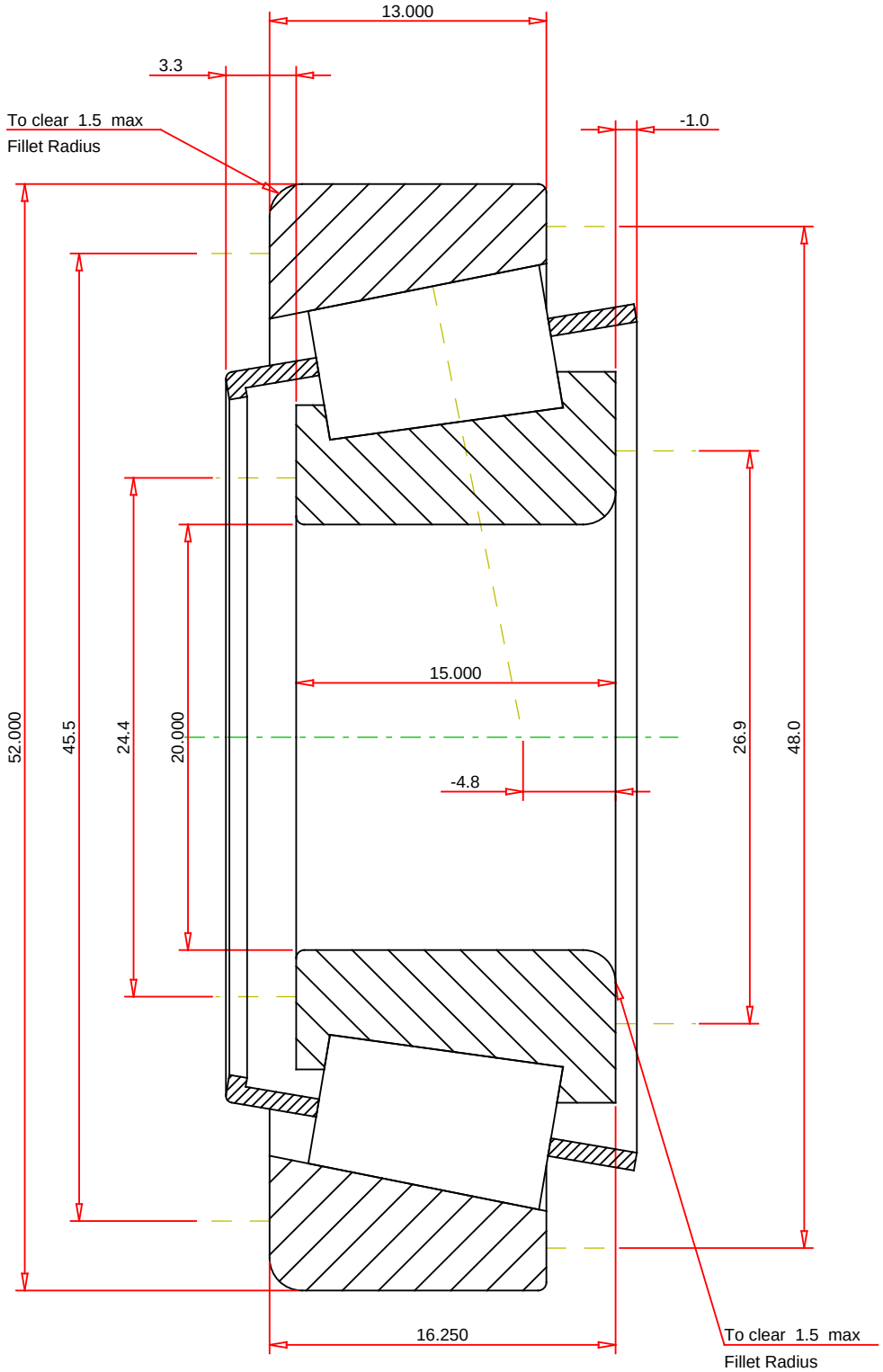

METRIC UNITS

ISO Factor - e	0.3	
ISO Factor - Y	2	
Bearing Weight	0.2	kg
Number of Rollers Per Row	12	
Effective Center Location	-4.8	mm

TIMKEN®

THE TIMKEN COMPANY
NORTH CANTON, OHIO USA

X30304 - Y30304
TS BEARING ASSEMBLY

K Factor	1.95	
Dynamic Radial Rating - C90	9980	N
Dynamic Thrust Rating - Ca90	5130	N
Static Radial Rating - C0	34500	N
Dynamic Radial Rating - C1	38500	N

Every reasonable effort has been made to ensure the accuracy of the information contained in this writing, but no liability is accepted for errors, omissions or for any other reason.

FOR DISCUSSION ONLY