The Timken Company
4500 Mt Pleasant St. NW
N. Canton, OH 44720
Phone: (234) 262-3000
E-Mail: CustomerCAD@timken.com • **Web site:** www.timken.com

Timken Part Number 31594 - 31520, Tapered Roller Bearings - TS (Tapered Single) Imperial

This is the most basic and most widely used type of tapered roller bearing. It consists of two main separable parts: the cone (inner ring) assembly and the cup (outer ring). It is typically mounted in opposing pairs on a shaft.



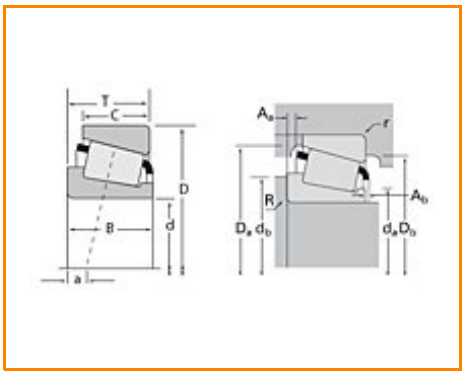

Specifications | Dimensions | Abutment and Fillet Dimensions | Basic Load Ratings | Factors

Specifications

Series	31500
Cone Part Number	31594
Cup Part Number	31520
Design Units	Imperial
Bearing Weight	0.600 Kg 1.40 lb
Cage Type	Stamped Steel

Dimensions

d - Bore	34.925 mm 1.3750 in

D - Cup Outer Diameter	76.2 mm 3 in
B - Cone Width	28.575 mm 1.1250 in
C - Cup Width	23.813 mm 0.9375 in
T - Bearing Width	29.370 mm 1.1563 in

Abutment and Fillet Dimensions

R - Cone Backface "To Clear" Radius[1]	1.520 mm 0.06 in
r - Cup Backface "To Clear" Radius[2]	3.30 mm 0.130 in
da - Cone Frontface Backing Diameter	43.43 mm 1.71 in
db - Cone Backface Backing Diameter	45.97 mm 1.81 in
Da - Cup Frontface Backing Diameter	71.90 mm 2.87 in
Db - Cup Backface Backing Diameter	64.01 mm 2.52 in
Ab - Cage-Cone Frontface Clearance	2 mm 0.08 in
Aa - Cage-Cone Backface Clearance	1 mm 0.04 in
a - Effective Center Location[3]	-7.60 mm -0.3 in

Basic Load Ratings

C90 - Dynamic Radial Rating (90 million revolutions)[4]	24600 N 5520 lbf
C1 - Dynamic Radial Rating (1 million revolutions)[5]	94700 N 21300 lbf
C0 - Static Radial Rating	107000 N 24100 lbf
C_{a90} - Dynamic Thrust Rating (90 million revolutions)[6]	16900 N 3800 lbf

Factors

K - Factor[7]	1.45
e - ISO Factor[8]	0.40
Y - ISO Factor[9]	1.49
G1 - Heat Generation Factor (Roller-Raceway)	26.3
G2 - Heat Generation Factor (Rib-Roller End)	9.08
Cg - Geometry Factor	0.0773

[1] These maximum fillet radii will be cleared by the bearing corners.
[2] These maximum fillet radii will be cleared by the bearing corners.
[3] Negative value indicates effective center inside cone backface.
[4] Based on 90 x 10^6 revolutions L_{10} life, for The Timken Company life calculation method. C_{90} and C_{a90} are radial and thrust values.
[5] Based on 1 x 10^6 revolutions L_{10} life, for the ISO life calculation method.
[6] Based on 90 x 10^6 revolutions L_{10} life, for The Timken Company life calculation method. C_{90} and C_{a90} are radial and thrust values for a single-row, $C_{90(2)}$ is the two-row radial value.
[7] These factors apply for both inch and metric calculations. Consult your Timken representative for instruction on use.
[8] These factors apply for both inch and metric calculations. Consult your Timken representative for instruction on use.
[9] These factors apply for both inch and metric calculations. Consult your Timken representative for instruction on use.

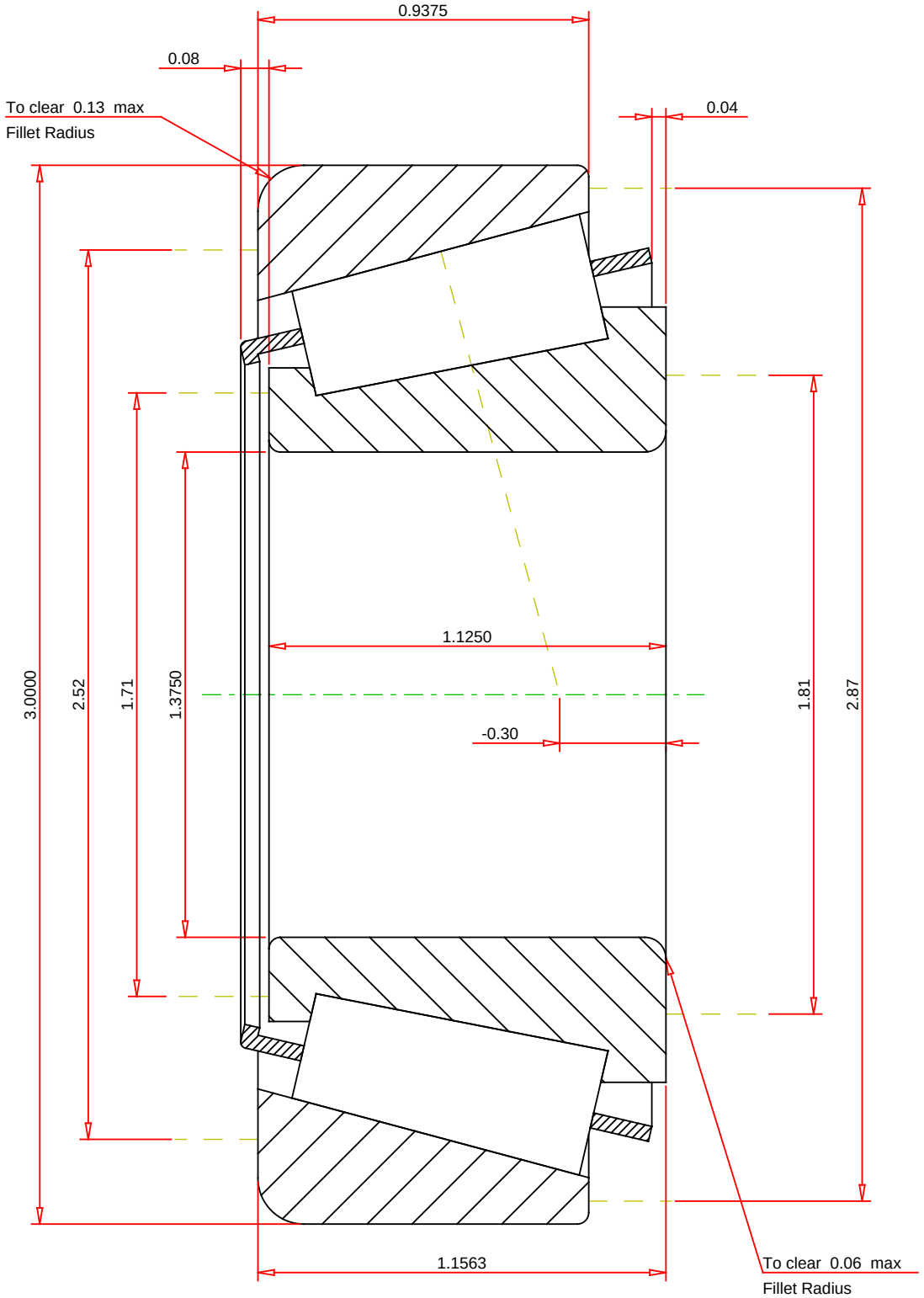

IMPERIAL UNITS

ISO Factor - e	0.4	
ISO Factor - Y	1.49	
Bearing Weight	1.4	lb
Number of Rollers Per Row	15	
Effective Center Location	-0.3	inch

TIMKEN®

THE TIMKEN COMPANY
NORTH CANTON, OHIO USA

31594 - 31520
TS BEARING ASSEMBLY

K Factor	1.45	
Dynamic Radial Rating - C90	24600	lbf
Dynamic Thrust Rating - Ca90	16900	lbf
Static Radial Rating - C0	107000	lbf
Dynamic Radial Rating - C1	94700	lbf

Every reasonable effort has been made to ensure the accuracy of the information contained in this writing, but no liability is accepted for errors, omissions or for any other reason.

FOR DISCUSSION ONLY