The Timken Company
4500 Mt Pleasant St. NW
N. Canton, OH 44720
Phone: (234) 262-3000
E-Mail: CustomerCAD@timken.com • **Web site:** www.timken.com

Timken Part Number GRA200RRB, Fafnir® Eccentric Locking Collar Ball Bearings



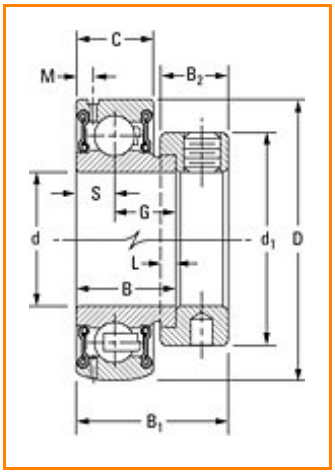

Specifications | Dimensions | Basic Load Ratings

Specifications

Bore Size d	2 in 50.8 mm
Bore Type	Cylindrical bore
Bearing Type	Ball Bearing
Seal Type	Molded Shroud
Material	Bearing Steel
Lubrication Type	Relubricatable
O.D. Type	Spherical OD
Dimension M	0.193 in 4.9 mm
Dimension B1	1.906 in 48.4 mm

Dimension B2	0.811 in 20.6 mm
Series	Standard
Weight	0.500 lb 0.200 Kg
Sub Series	GRA..RRB

Dimensions

Outside Diameter D	3.937 in 100.000 mm
Inside Ring Width B	32.54 mm 1.281 in
Outside Ring Width C	24.000 mm 0.945 in
Radius r	0.6 mm 0.024 in
Center of Bearing from End S	11.99 mm 0.472 in
Dimension S1	36.41 mm 1.433 in
Set Screw Size	7/16-14
Number of Set Screws	2
Angle between Set Screws	90 º

Basic Load Ratings

Static Load Rating	6400 lbf 28500 N

Dynamic Load Rating	10800 lbf 48000 N

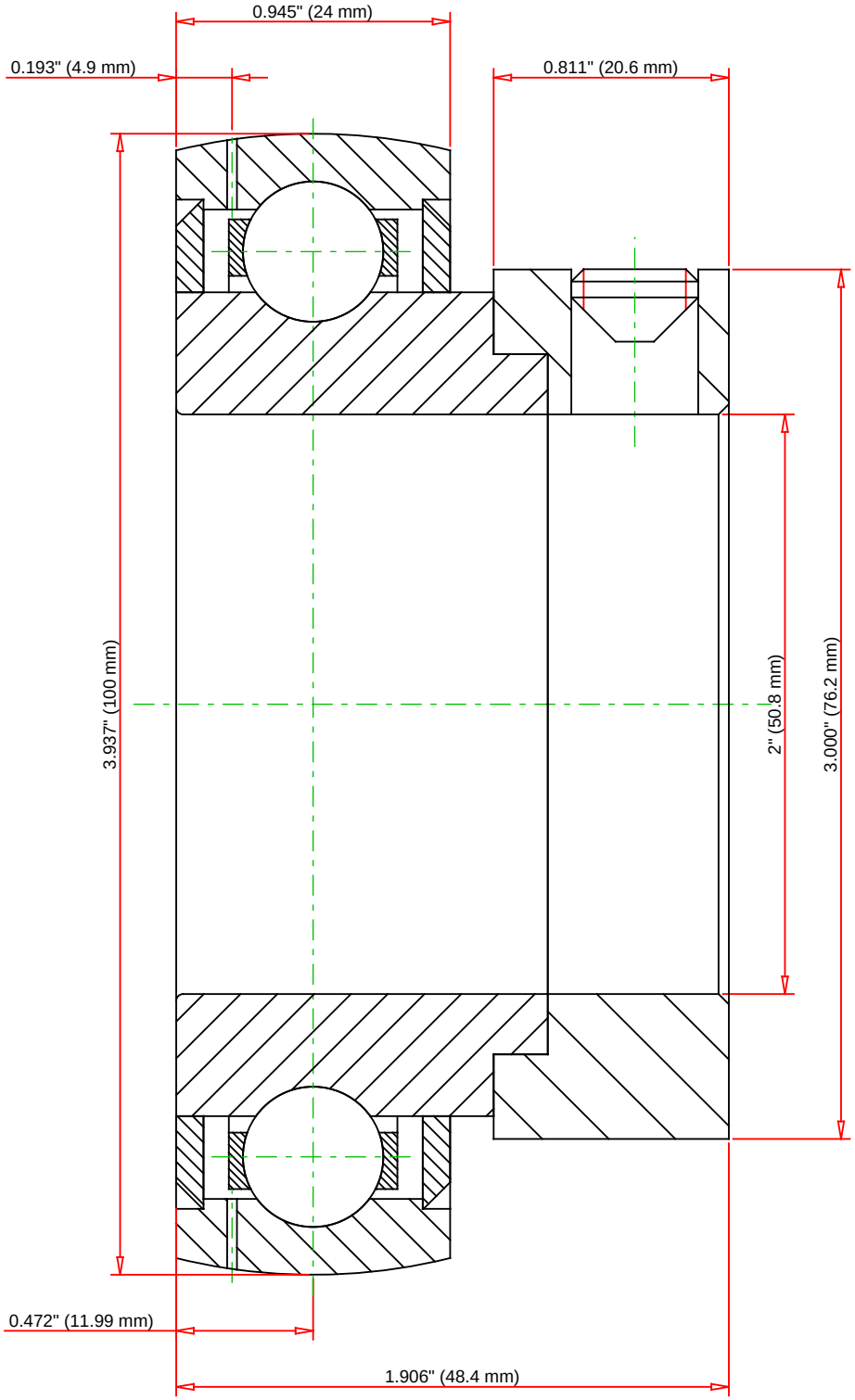

Weight	0.5 lb	0.2 kg

TIMKEN®

THE TIMKEN COMPANY
NORTH CANTON, OHIO USA

GRA200RRB

Fafnir® Eccentric Locking Collar Ball Bearings

Basic Load Ratings - C_r	10800 lbf	48000 N
Load Ratings - C_{0r}	6400 lbf	28500 N

Every reasonable effort has been made to ensure the accuracy of the information contained in this writing, but no liability is accepted for errors, omissions or for any other reason.

FOR DISCUSSION ONLY