The Timken Company
4500 Mt Pleasant St. NW
N. Canton, OH 44720
Phone: (234) 262-3000
E-Mail: CustomerCAD@timken.com • **Web site:** www.timken.com

Timken Part Number M86649 - M86610, Tapered Roller Bearings - TS (Tapered Single) Imperial

This is the most basic and most widely used type of tapered roller bearing. It consists of two main separable parts: the cone (inner ring) assembly and the cup (outer ring). It is typically mounted in opposing pairs on a shaft.



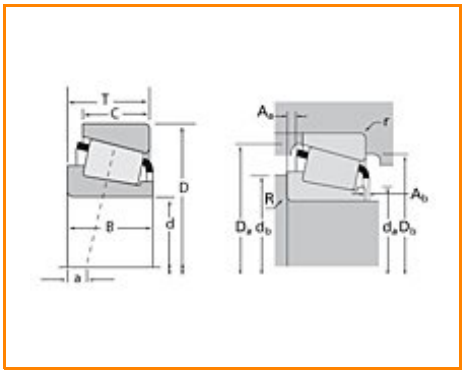

Specifications | Dimensions | Abutment and Fillet Dimensions | Basic Load Ratings | Factors

Specifications

Series	M86600
Cone Part Number	M86649
Cup Part Number	M86610
Design Units	Imperial
Bearing Weight	0.300 Kg 0.70 lb
Cage Type	Stamped Steel

Dimensions

d - Bore	30.163 mm 1.1875 in
D - Cup Outer Diameter	64.292 mm 2.5312 in
B - Cone Width	21.433 mm 0.8438 in
C - Cup Width	16.670 mm 0.6563 in
T - Bearing Width	21.433 mm 0.8438 in

Abutment and Fillet Dimensions

R - Cone Backface "To Clear" Radius[1]	1.520 mm 0.06 in
r - Cup Backface "To Clear" Radius[2]	1.52 mm 0.06 in
da - Cone Frontface Backing Diameter	38.10 mm 1.50 in
db - Cone Backface Backing Diameter	43.94 mm 1.73 in
Da - Cup Frontface Backing Diameter	60.96 mm 2.40 in
Db - Cup Backface Backing Diameter	54.10 mm 2.13 in
Ab - Cage-Cone Frontface Clearance	1.8 mm 0.07 in
Aa - Cage-Cone Backface Clearance	0.8 mm 0.03 in
a - Effective Center Location[3]	-3.3 mm -0.13 in

Basic Load Ratings

C90 - Dynamic Radial Rating (90 million revolutions)[4]	15600 N 3510 lbf
C1 - Dynamic Radial Rating (1 million revolutions)[5]	60200 N 13500 lbf
C0 - Static Radial Rating	71700 N 16100 lbf
C_{a90} - Dynamic Thrust Rating (90 million revolutions)[6]	14600 N 3280 lbf

Factors

K - Factor[7]	1.07
e - ISO Factor[8]	0.55
Y - ISO Factor[9]	1.1
G1 - Heat Generation Factor (Roller-Raceway)	16.8
G2 - Heat Generation Factor (Rib-Roller End)	9.36
Cg - Geometry Factor	0.0736

[1] These maximum fillet radii will be cleared by the bearing corners.

[2] These maximum fillet radii will be cleared by the bearing corners.

[3] Negative value indicates effective center inside cone backface.

[4] Based on 90 x 10^6 revolutions L_{10} life, for The Timken Company life calculation method. C_{90} and C_{a90} are radial and thrust values.

[5] Based on 1 x 10^6 revolutions L_{10} life, for the ISO life calculation method.

[6] Based on 90 x 10^6 revolutions L_{10} life, for The Timken Company life calculation method. C_{90} and C_{a90} are radial and thrust values for a single-row, $C_{90(2)}$ is the two-row radial value.

[7] These factors apply for both inch and metric calculations. Consult your Timken representative for instruction on use.

[8] These factors apply for both inch and metric calculations. Consult your Timken representative for instruction

on use.

[9] These factors apply for both inch and metric calculations. Consult your Timken representative for instruction on use.

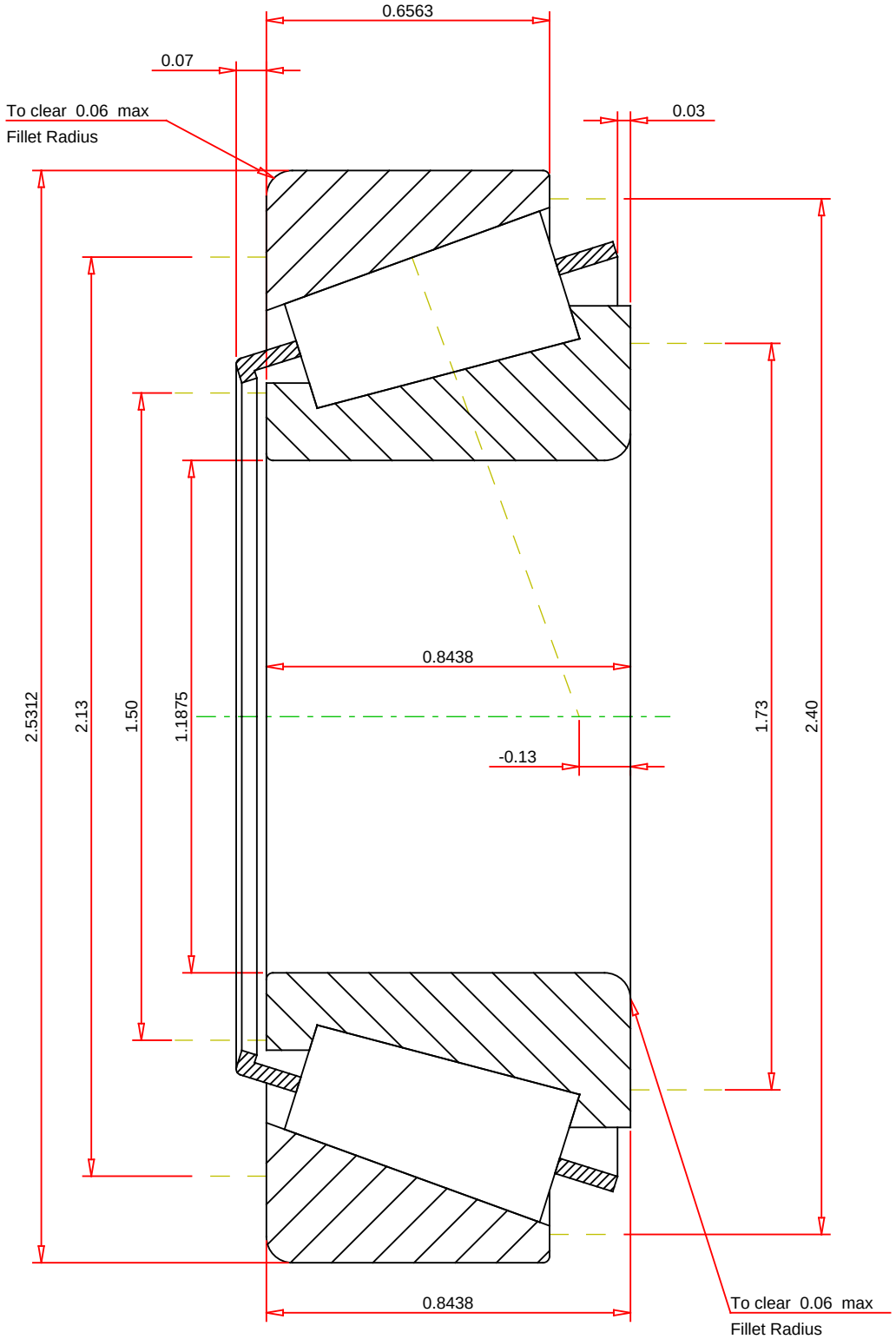

IMPERIAL UNITS

ISO Factor - e	0.55	
ISO Factor - Y	1.1	
Bearing Weight	0.7	lb
Number of Rollers Per Row	18	
Effective Center Location	-0.13	inch

TIMKEN

THE TIMKEN COMPANY
NORTH CANTON, OHIO USA

M86649 - M86610
TS BEARING ASSEMBLY

K Factor	1.07	
Dynamic Radial Rating - C90	15600	lbf
Dynamic Thrust Rating - Ca90	14600	lbf
Static Radial Rating - C0	71700	lbf
Dynamic Radial Rating - C1	60200	lbf

Every reasonable effort has been made to ensure the accuracy of the information contained in this writing, but no liability is accepted for errors, omissions or for any other reason.

FOR DISCUSSION ONLY