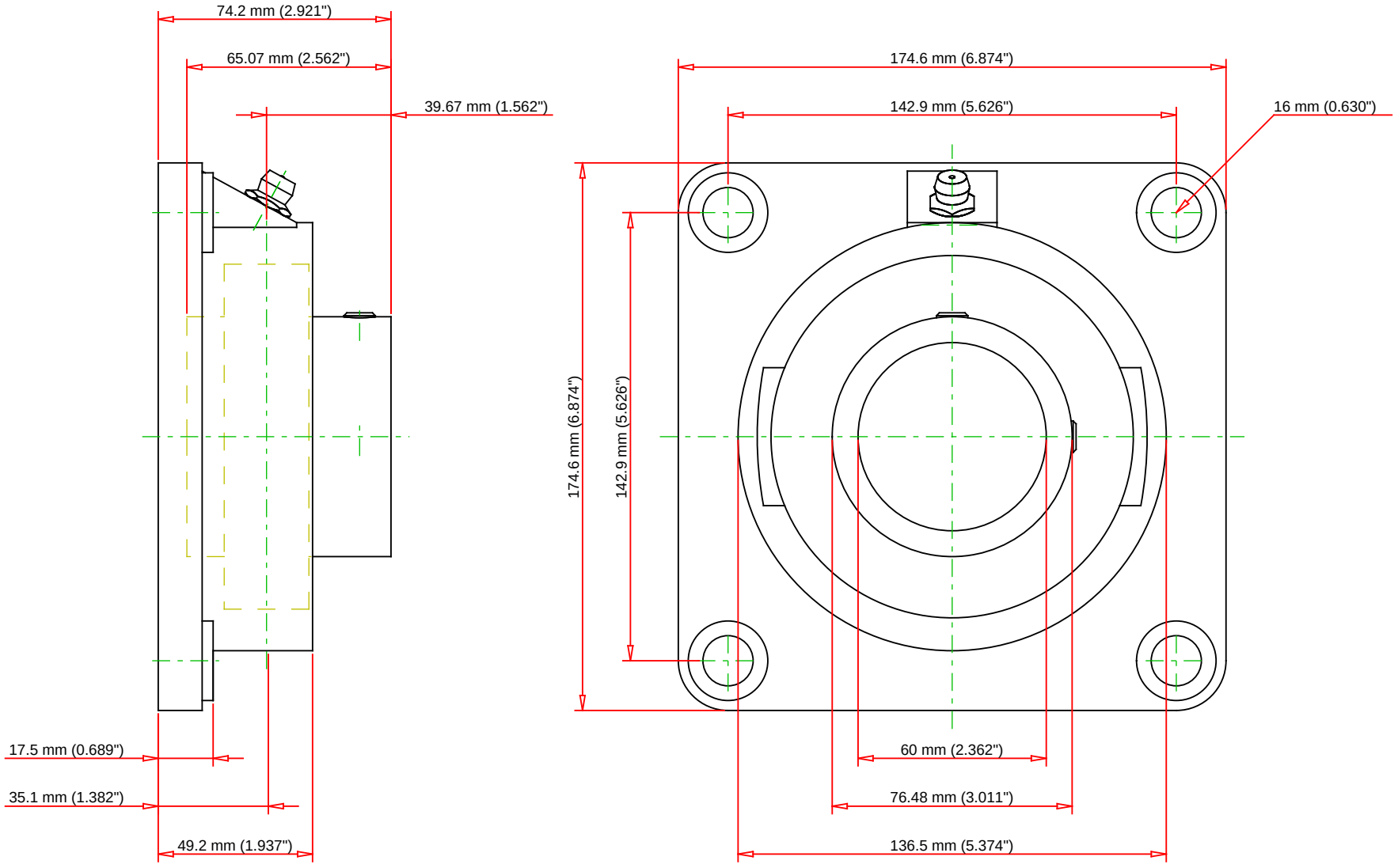

Bearing Number	GYE60KRRB SGT			
Load Ratings - C_r	13200	lbf	58500	N
Load Ratings - C_{0r}	8000	lbf	35600	N
Weight	0	lb	0	kg
Bolt Size	M10x1.5			

TIMKEN

THE TIMKEN COMPANY
NORTH CANTON, OHIO USA

YCJ 60 SGT

Fafnir® Four-Bolt Flanged Units Setscrew Locking

Every reasonable effort has been made to ensure the accuracy of the information contained in this writing, but no liability is accepted for errors, omissions or for any other reason.

FOR DISCUSSION ONLY