The Timken Company
4500 Mt Pleasant St. NW
N. Canton, OH 44720
Phone: (234) 262-3000
E-Mail: CustomerCAD@timken.com • **Web site:** www.timken.com

Timken Part Number SAK 1 1/4, Pillow Block Units Setscrew Locking (Includes Industrial and Standard Series)



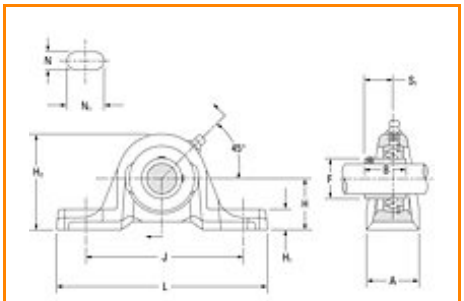

Specifications | Dimensions | Basic Load Ratings

Specifications

Bore Size d	1 1/4 in 31.8 mm
Bearing Number	GYA104RRB
Inside Ring Outside Diameter	1.854 in 47.1 mm
Dimension B1	1.437 in 36.5 mm
Dimension T	0.890 in 22.6 mm
Dimension D1	1.843 in 46.8 mm
Series	Standard
Weight	3.351 lb 1.52 Kg

Seal Type	Narrow Shroud

Dimensions

Shaft Height H	46.04 mm 1.813 in
Total Length L	166.7 mm 6.563 in
Total Width A	1.780 in 45.2 mm
Bolt Hole Spacing J	130.2 mm 5.126 in
Bolt Hole Width N	14.3 mm 0.563 in
Bolt Hole Length N1	24.6 mm 0.969 in
Base Height H1	16.7 mm 0.657 in
Total Height H2	92.1 mm 3.626 in
Dimension L1	55.6 mm 2.189 in
Inside Ring Width B	N/A
Center of Bearing from End S	10.7 mm 0.421 in

Basic Load Ratings

Static Load Rating	3400 lbf 15100 N

Dynamic Load Rating	6400 lbf 28500 N

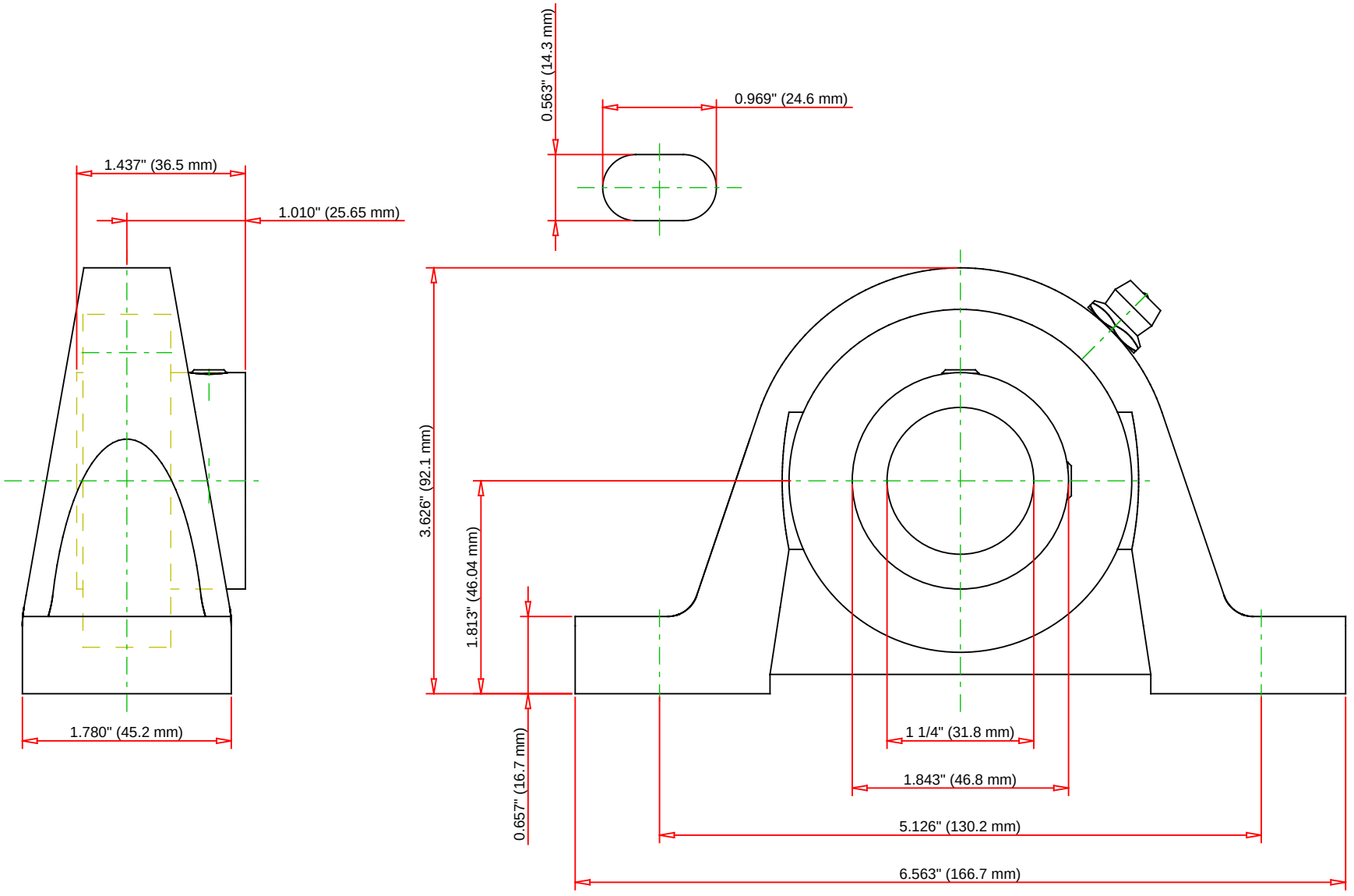

Bearing Number	GYA104RRB				
Load Ratings - C_r	6400	lbf	28500	N	
Load Ratings - C_{0r}	3400	lbf	15100	N	
Weight	3.351	lb	1.52	kg	
Bolt Size	M8x1.25				

TIMKEN

THE TIMKEN COMPANY
NORTH CANTON, OHIO USA

SAK 1 1/4

Pillow Block Units Setscrew Locking (Includes Industrial and Standard Series)

Every reasonable effort has been made to ensure the accuracy of the information contained in this writing, but no liability is accepted for errors, omissions or for any other reason.

FOR DISCUSSION ONLY