The Timken Company
4500 Mt Pleasant St. NW
N. Canton, OH 44720
Phone: (234) 262-3000
E-Mail: CustomerCAD@timken.com • **Web site:** www.timken.com

Timken Part Number A4050 - A4138, Tapered Roller Bearings - TS (Tapered Single) Imperial

This is the most basic and most widely used type of tapered roller bearing. It consists of two main separable parts: the cone (inner ring) assembly and the cup (outer ring). It is typically mounted in opposing pairs on a shaft.



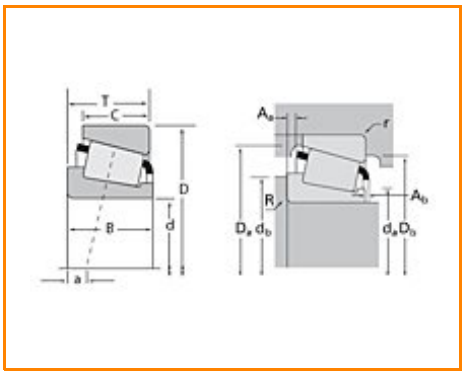

Specifications | Dimensions | Abutment and Fillet Dimensions | Basic Load Ratings | Factors

Specifications

Series	A4000
Cone Part Number	A4050
Cup Part Number	A4138
Design Units	Imperial
Bearing Weight	0.100 Kg 0.100 lb
Cage Type	Stamped Steel

Dimensions

d - Bore	12.700 mm 0.5000 in

D - Cup Outer Diameter	34.989 mm 1.3775 in
B - Cone Width	10.988 mm 0.4326 in
C - Cup Width	8.730 mm 0.3437 in
T - Bearing Width	10.998 mm 0.4330 in

Abutment and Fillet Dimensions

R - Cone Backface "To Clear" Radius[1]	1.270 mm 0.050 in
r - Cup Backface "To Clear" Radius[2]	1.27 mm 0.050 in
da - Cone Frontface Backing Diameter	17.02 mm 0.67 in
db - Cone Backface Backing Diameter	18.54 mm 0.73 in
Da - Cup Frontface Backing Diameter	32.51 mm 1.28 in
Db - Cup Backface Backing Diameter	28.96 mm 1.14 in
Ab - Cage-Cone Frontface Clearance	1.8 mm 0.07 in
Aa - Cage-Cone Backface Clearance	0 mm 0 in
a - Effective Center Location[3]	-2.5 mm -0.1 in

Basic Load Ratings

C90 - Dynamic Radial Rating (90 million revolutions)[4]	3410 N 767 lbf
C1 - Dynamic Radial Rating (1 million revolutions)[5]	13200 N 2960 lbf
C0 - Static Radial Rating	11500 N 2580 lbf
C_{a90} - Dynamic Thrust Rating (90 million revolutions)[6]	2640 N 594 lbf

Factors

K - Factor[7]	1.29
e - ISO Factor[8]	0.45
Y - ISO Factor[9]	1.32
G1 - Heat Generation Factor (Roller-Raceway)	2.3
G2 - Heat Generation Factor (Rib-Roller End)	4.12
Cg - Geometry Factor	0.0355

[1] These maximum fillet radii will be cleared by the bearing corners.
[2] These maximum fillet radii will be cleared by the bearing corners.
[3] Negative value indicates effective center inside cone backface.
[4] Based on 90 x 10^6 revolutions L_{10} life, for The Timken Company life calculation method. C_{90} and C_{a90} are radial and thrust values.
[5] Based on 1 x 10^6 revolutions L_{10} life, for the ISO life calculation method.
[6] Based on 90 x 10^6 revolutions L_{10} life, for The Timken Company life calculation method. C_{90} and C_{a90} are radial and thrust values for a single-row, $C_{90(2)}$ is the two-row radial value.
[7] These factors apply for both inch and metric calculations. Consult your Timken representative for instruction on use.
[8] These factors apply for both inch and metric calculations. Consult your Timken representative for instruction on use.
[9] These factors apply for both inch and metric calculations. Consult your Timken representative for instruction on use.

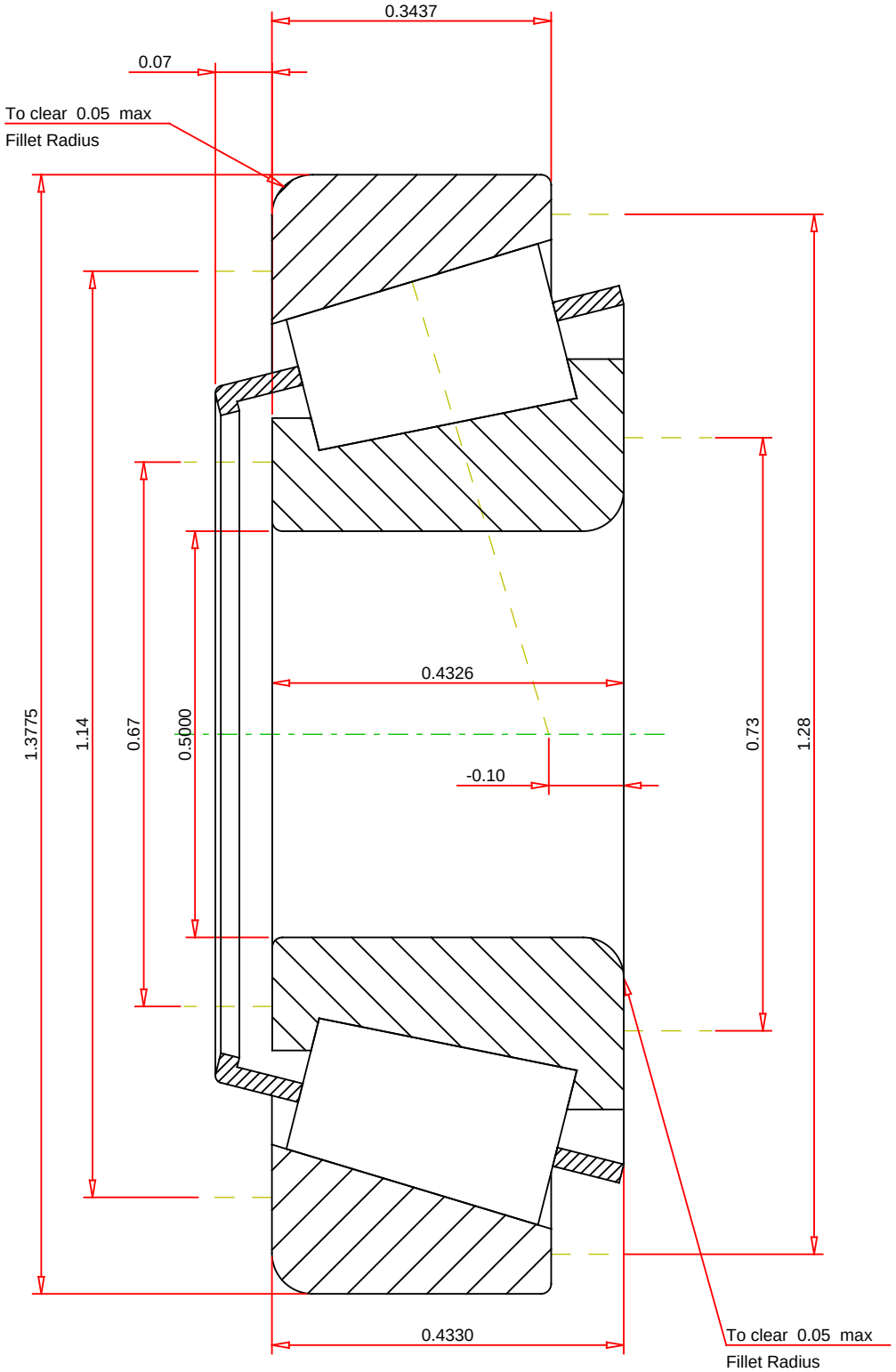

IMPERIAL UNITS

ISO Factor - e	0.45	
ISO Factor - Y	1.32	
Bearing Weight	0.1	lb
Number of Rollers Per Row	12	
Effective Center Location	-0.1	inch

TIMKEN®

THE TIMKEN COMPANY
NORTH CANTON, OHIO USA

A4050 - A4138
TS BEARING ASSEMBLY

K Factor	1.29	
Dynamic Radial Rating - C90	3410	lbf
Dynamic Thrust Rating - Ca90	2640	lbf
Static Radial Rating - C0	11500	lbf
Dynamic Radial Rating - C1	13200	lbf

Every reasonable effort has been made to ensure the accuracy of the information contained in this writing, but no liability is accepted for errors, omissions or for any other reason.

FOR DISCUSSION ONLY