The Timken Company
4500 Mt Pleasant St. NW
N. Canton, OH 44720
Phone: (234) 262-3000
E-Mail: CustomerCAD@timken.com • **Web site:** www.timken.com

Timken Part Number H936349 - H936310, Tapered Roller Bearings - TS (Tapered Single) Imperial

This is the most basic and most widely used type of tapered roller bearing. It consists of two main separable parts: the cone (inner ring) assembly and the cup (outer ring). It is typically mounted in opposing pairs on a shaft.



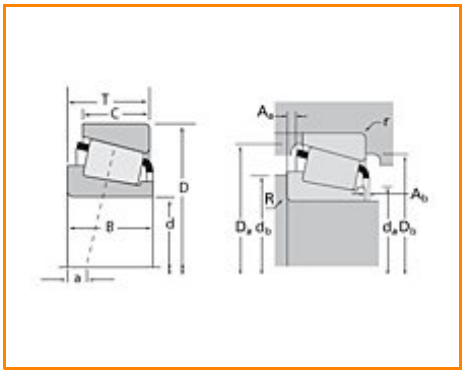

Specifications | Dimensions | Abutment and Fillet Dimensions | Basic Load Ratings | Factors

Specifications

Series	H936300
Cone Part Number	H936349
Cup Part Number	H936310
Design Units	Imperial
Bearing Weight	29.700 Kg 65.500 lb
Cage Type	Stamped Steel

Dimensions

d - Bore	168.275 mm 6.6250 in
D - Cup Outer Diameter	330.200 mm 13.0000 in
B - Cone Width	79.375 mm 3.1250 in
C - Cup Width	53.975 mm 2.1250 in
T - Bearing Width	85.725 mm 3.3750 in

Abutment and Fillet Dimensions

R - Cone Backface "To Clear" Radius[1]	6.35 mm 0.25 in
r - Cup Backface "To Clear" Radius[2]	6.35 mm 0.250 in
da - Cone Frontface Backing Diameter	192.53 mm 8.65 in
db - Cone Backface Backing Diameter	217.93 mm 8.58 in
Da - Cup Frontface Backing Diameter	311.90 mm 12.28 in
Db - Cup Backface Backing Diameter	281.94 mm 11.10 in
Ab - Cage-Cone Frontface Clearance	10.4 mm 0.41 in
Aa - Cage-Cone Backface Clearance	17 mm 0.67 in
a - Effective Center Location[3]	16.80 mm 0.66 in

Basic Load Ratings

C90 - Dynamic Radial Rating (90 million revolutions)[4]	319000 N 71600 lbf
C1 - Dynamic Radial Rating (1 million revolutions)[5]	1230000 N 276000 lbf
C0 - Static Radial Rating	1400000 N 316000 lbf
C_{a90} - Dynamic Thrust Rating (90 million revolutions)[6]	441000 N 99200 lbf

Factors

K - Factor[7]	0.72
e - ISO Factor[8]	0.81
Y - ISO Factor[9]	0.74
G1 - Heat Generation Factor (Roller-Raceway)	638
G2 - Heat Generation Factor (Rib-Roller End)	69.1
Cg - Geometry Factor	0.148

[1] These maximum fillet radii will be cleared by the bearing corners.

[2] These maximum fillet radii will be cleared by the bearing corners.

[3] Negative value indicates effective center inside cone backface.

[4] Based on 90 x 10^6 revolutions L_{10} life, for The Timken Company life calculation method. C_{90} and C_{a90} are radial and thrust values.

[5] Based on 1 x 10^6 revolutions L_{10} life, for the ISO life calculation method.

[6] Based on 90 x 10^6 revolutions L_{10} life, for The Timken Company life calculation method. C_{90} and C_{a90} are radial and thrust values for a single-row, $C_{90(2)}$ is the two-row radial value.

[7] These factors apply for both inch and metric calculations. Consult your Timken representative for instruction on use.

[8] These factors apply for both inch and metric calculations. Consult your Timken representative for instruction

on use.

[9] These factors apply for both inch and metric calculations. Consult your Timken representative for instruction on use.

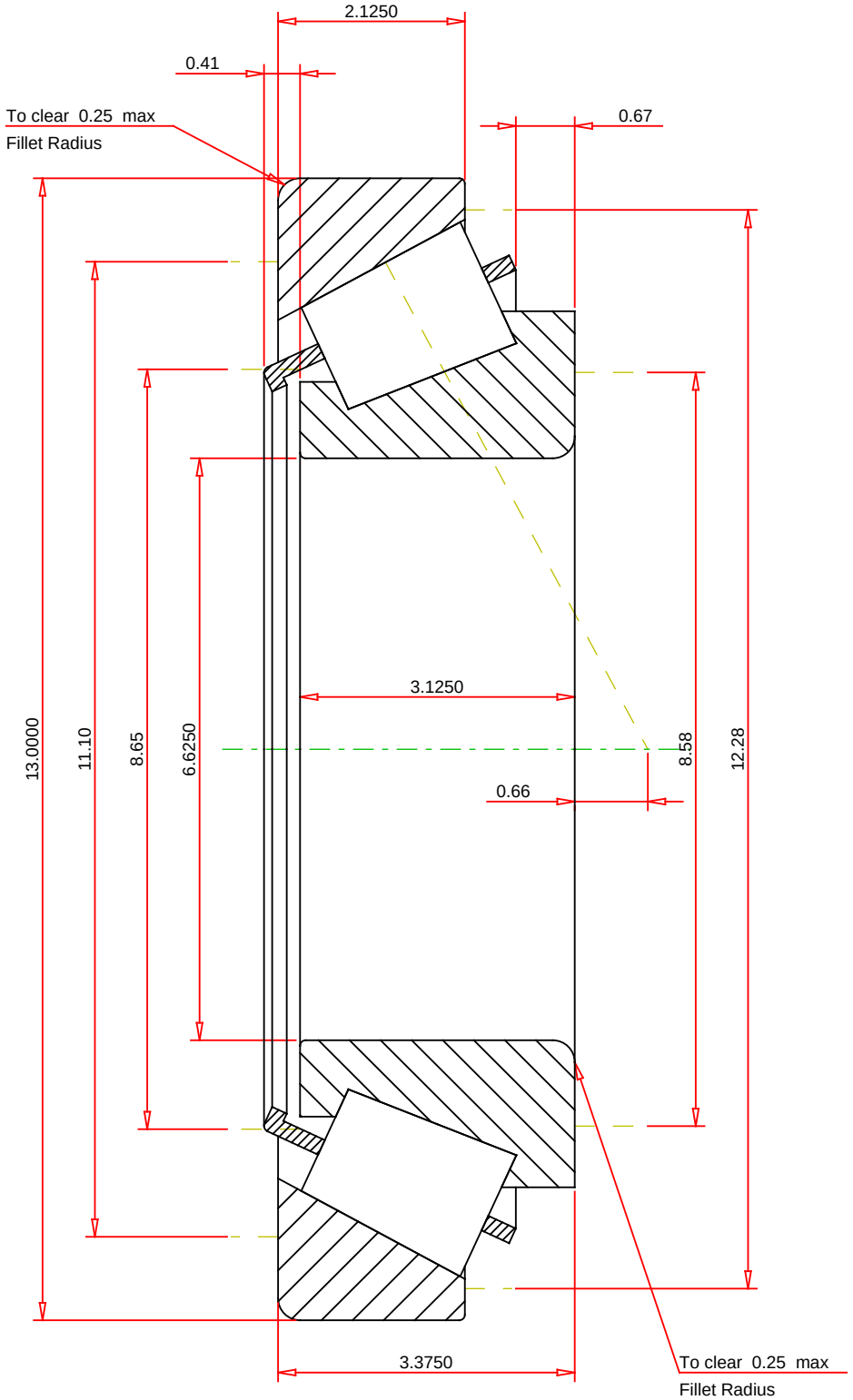

IMPERIAL UNITS

ISO Factor - e	0.81	
ISO Factor - Y	0.74	
Bearing Weight	65.5	lb
Number of Rollers Per Row	18	
Effective Center Location	0.66	inch

TIMKEN

THE TIMKEN COMPANY
NORTH CANTON, OHIO USA

H936349 - H936310
TS BEARING ASSEMBLY

K Factor	0.72	
Dynamic Radial Rating - C90	319000	lbf
Dynamic Thrust Rating - Ca90	441000	lbf
Static Radial Rating - C0	1400000	lbf
Dynamic Radial Rating - C1	1230000	lbf

Every reasonable effort has been made to ensure the accuracy of the information contained in this writing, but no liability is accepted for errors, omissions or for any other reason.

FOR DISCUSSION ONLY