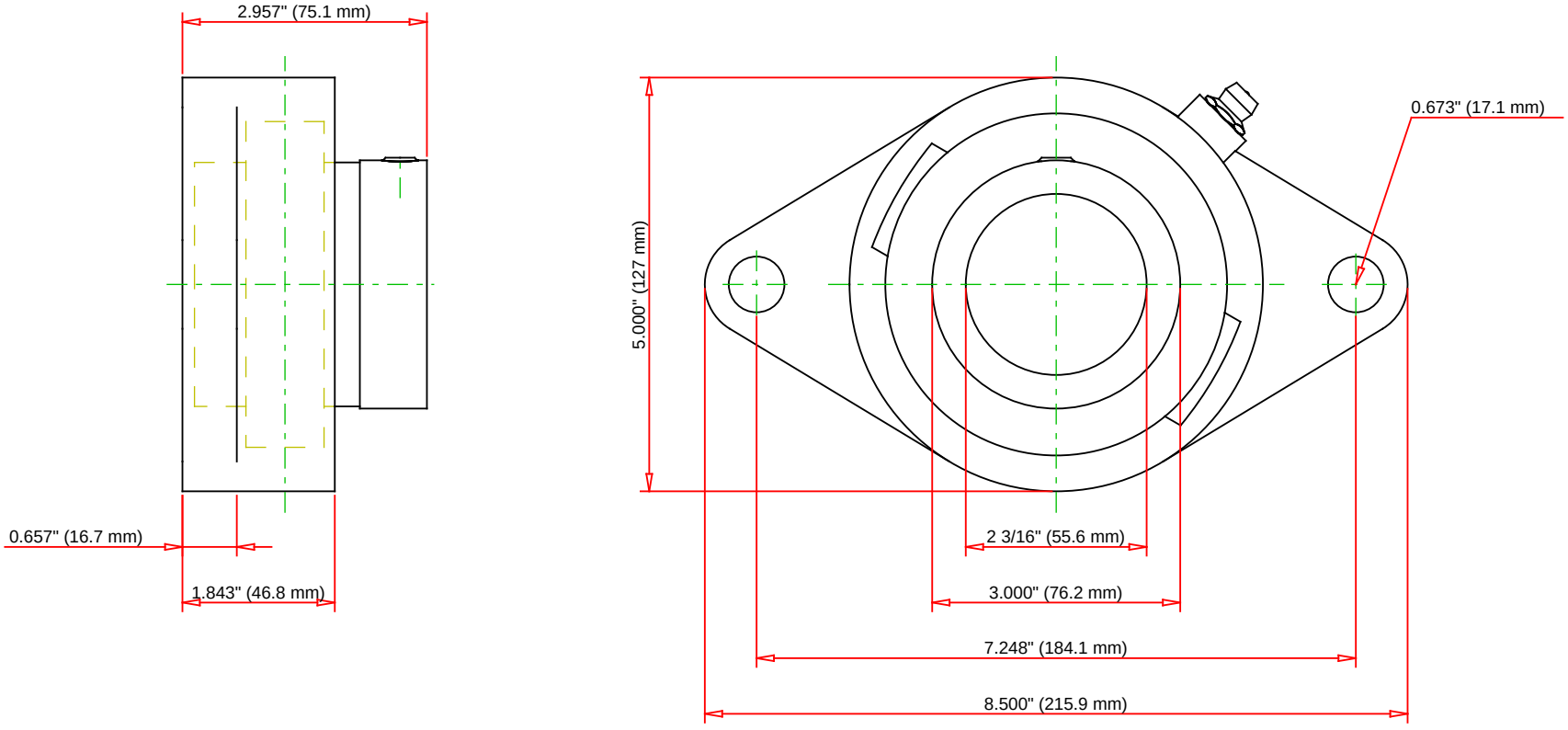

Bearing Number	G1203KPPB4			
Load Ratings - C_r	10800	lbf	48100	N
Load Ratings - C_{0r}	6570	lbf	29200	N
Weight	8.087	lb	3.668	kg

TIMKEN

THE TIMKEN COMPANY
NORTH CANTON, OHIO USA

TCJT 2 3/16

Fafnir® Two-Bolt Flanged Units Eccentric Locking Collar

Every reasonable effort has been made to ensure the accuracy of the information contained in this writing, but no liability is accepted for errors, omissions or for any other reason.

FOR DISCUSSION ONLY