The Timken Company
4500 Mt Pleasant St. NW
N. Canton, OH 44720
Phone: (234) 262-3000
E-Mail: CustomerCAD@timken.com • **Web site:** www.timken.com

Part Number TCJT 2 3/16, Fafnir® Two-Bolt Flanged Units Eccentric Locking Collar



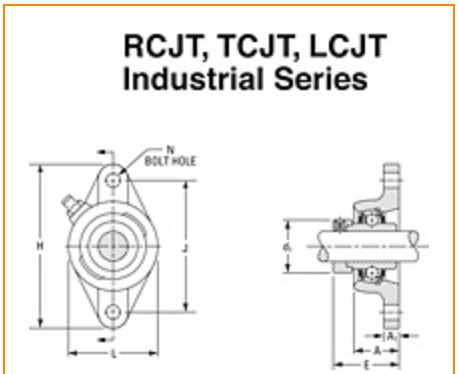

Specifications | Dimensions | Basic Load Ratings

Specifications

Shaft Size d	2 3/16 in 55.6 mm
Bearing Type	Ball Bearing
Bearing Number	G1203KPPB4
Dimension E	2.957 in 75.1 mm
Inside Ring Outside Diameter	2.980 in 75.7 mm
e	0.116 in 2.958 mm
Series	Industrial
Weight	8.087 lb 3.668 Kg

Seal Type	Tri-Ply Seal
Housing Construction	Two-Bolt Flange
Alternate Part Name	TCJT2 3/16

Dimensions

Housing Width A	46.8 mm 1.843 in
Total Length H	215.9 mm 8.50 in
Total Height L	127.0 mm 5.00 in
Bolt Hole Spacing J	184.1 mm 7.248 in
Bolt Hole Size N	17.1 mm 0.673 in
Flange Thickness A1	16.7 mm 0.657 in
Center of Bearing from Housing End A2	1.242 mm 0.049 in
Inside Ring Width B	0 mm 0.000 in

Basic Load Ratings

Static Load Rating	6570 lbf 29200 N
Dynamic Load Rating	10800 lbf 48100 N

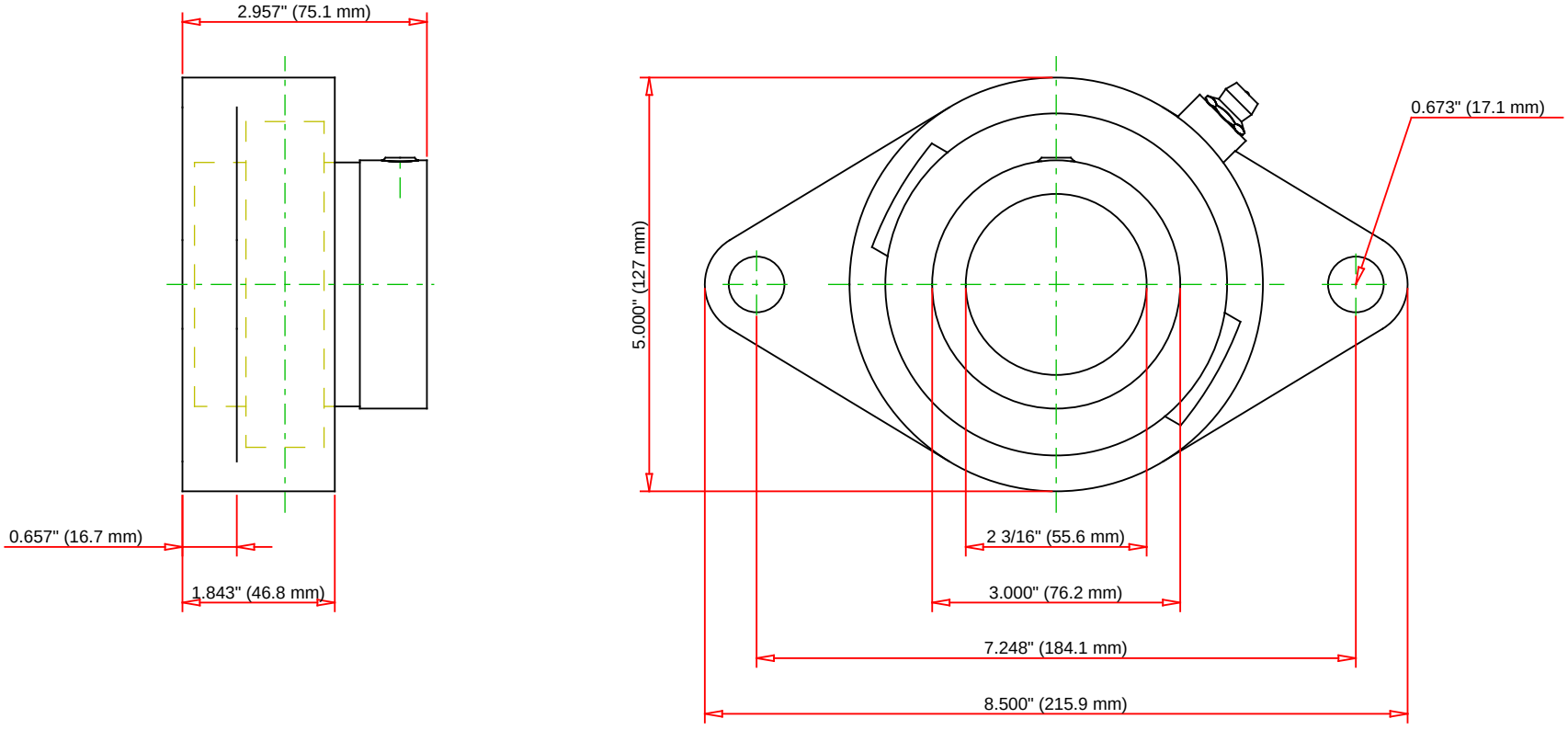

Bearing Number	G1203KPPB4			
Load Ratings - C_r	10800	lbf	48100	N
Load Ratings - C_{0r}	6570	lbf	29200	N
Weight	8.087	lb	3.668	kg

TIMKEN

THE TIMKEN COMPANY
NORTH CANTON, OHIO USA

TCJT 2 3/16

Fafnir® Two-Bolt Flanged Units Eccentric Locking Collar

Every reasonable effort has been made to ensure the accuracy of the information contained in this writing, but no liability is accepted for errors, omissions or for any other reason.

FOR DISCUSSION ONLY