**The Timken Company**
4500 Mt Pleasant St. NW
N. Canton, OH 44720
**Phone:** (234) 262-3000
**E-Mail:** CustomerCAD@timken.com • **Web site:** www.timken.com

# Timken Part Number YAS 1 15/16 SGT, Pillow Block Units Setscrew Locking (Includes Industrial and Standard Series)



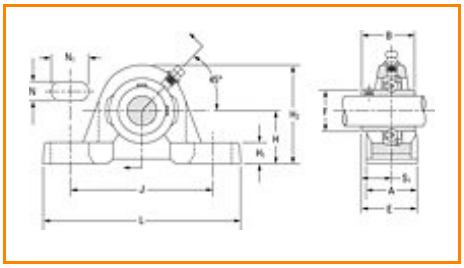

Specifications | Dimensions | Basic Load Ratings

## Specifications

| | |
|---|---|
| **Bore Size d** | 1 15/16 in<br>49.2 mm |
| **Bearing Number** | GY1115KRRB SGT |
| **Inside Ring Outside Diameter** | 2.474 in<br>62.8 mm |
| **Dimension B1** | 2.031 in<br>51.6 mm |
| **Dimension T** | 1.142 in<br>29 mm |
| **Dimension D1** | 2.472 in<br>62.8 mm |
| **Series** | Industrial |
| **Weight** | 7.305 lb<br>3.3136 Kg |

| | |
|---|---|
| **Seal Type** | Shroud Seal |

## Dimensions

| | |
|---|---|
| **Shaft Height H** | 57.15 mm<br>2.250 in |
| **Total Length L** | 200.2 mm<br>7.882 in |
| **Total Width A** | 2.280 in<br>57.9 mm |
| **Bolt Hole Spacing J** | 158 mm<br>6.220 in |
| **Bolt Hole Width N** | 18.3 mm<br>0.720 in |
| **Bolt Hole Length N1** | 25.4 mm<br>1.000 in |
| **Base Height H1** | 19.1 mm<br>0.752 in |
| **Total Height H2** | 114.3 mm<br>4.500 in |
| **Dimension L1** | 66.7 mm<br>2.626 in |
| **Inside Ring Width B** | N/A |
| **Center of Bearing from End S** | 19.1 mm<br>0.752 in |

## Basic Load Ratings

| | |
|---|---|
| **Static Load Rating** | 5100 lbf<br>22700 N |

| | |
|---|---|
| **Dynamic Load Rating** | 8800 lbf<br>39000 N |

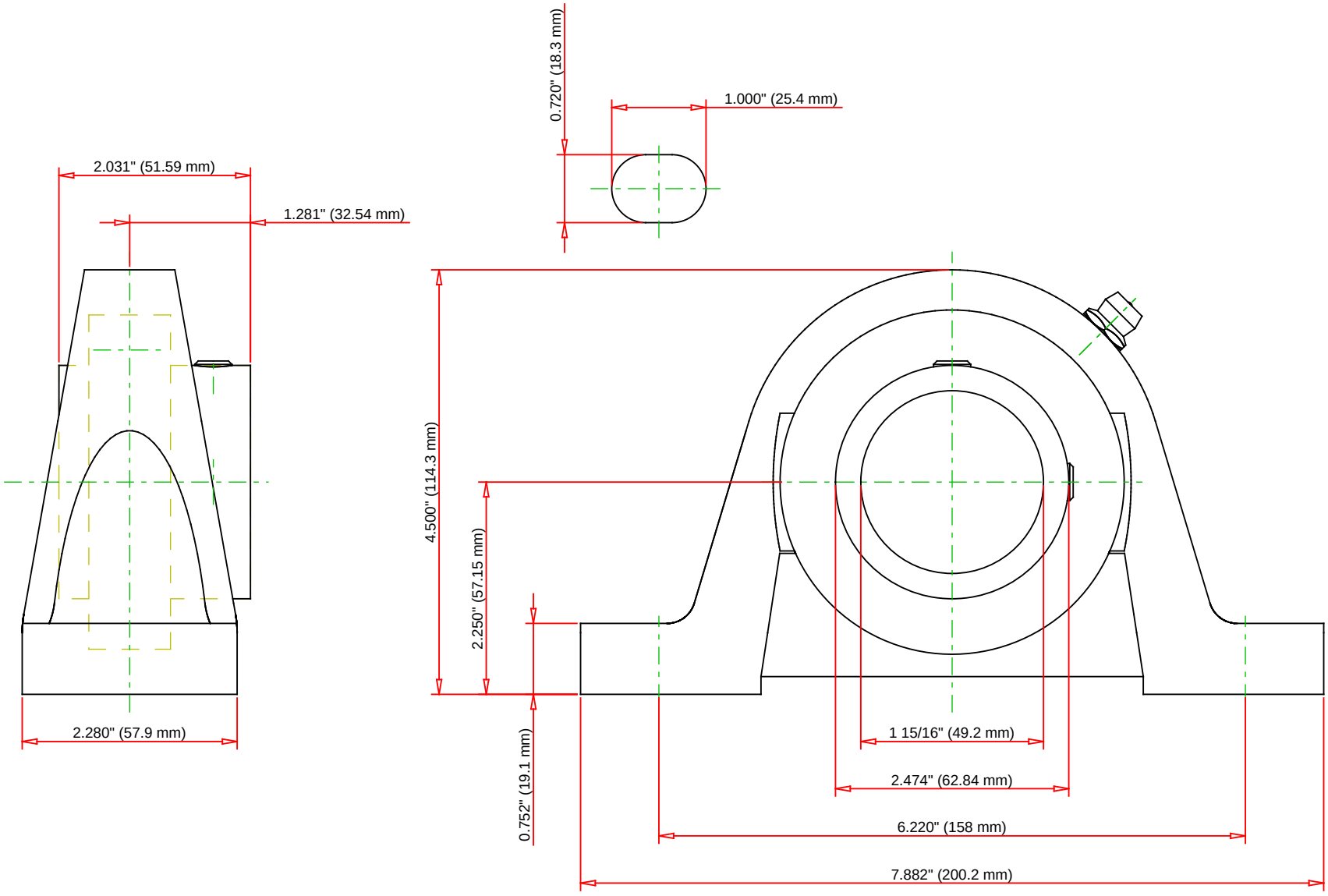


| | | | | | |
|---|---|---|---|---|---|
| Bearing Number | GY1115KRRB SGT | | | | |
| Load Ratings - $C_r$ | 8800 | lbf | 39000 | N | |
| Load Ratings - $C_{0r}$ | 5100 | lbf | 22700 | N | |
| Weight | 7.305 | lb | 3.3136 | kg | |
| Bolt Size | M10x1.5 | | | | |

TIMKEN

THE TIMKEN COMPANY
NORTH CANTON, OHIO USA

# YAS 1 15/16 SGT

Pillow Block Units Setscrew Locking (Includes Industrial and Standard Series)

Every reasonable effort has been made to ensure the accuracy of the information contained in this writing, but no liability is accepted for errors, omissions or for any other reason.

FOR DISCUSSION ONLY