The Timken Company
4500 Mt Pleasant St. NW
N. Canton, OH 44720
Phone: (234) 262-3000
E-Mail: CustomerCAD@timken.com • **Web site:** www.timken.com

Timken Part Number VAK 7/8, Pillow Block Units Eccentric Locking Collar (Includes Industrial and Standard Series)



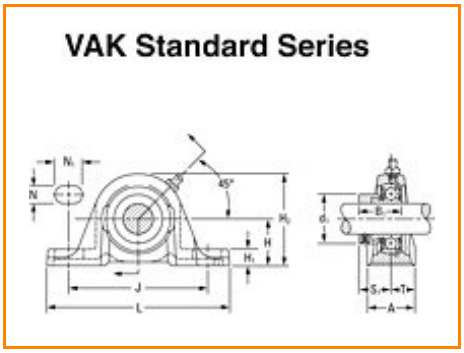

Specifications | Dimensions | Basic Load Ratings

Specifications

Bore Size d	7/8 in 22.2 mm
Bearing Number	GRA014RRB
Inside Ring Outside Diameter	0.531 in 13.5 mm
Dimension B1	1.220 in 31 mm
Dimension T	0.705 in 17.9 mm
Series	Standard
Weight	1.671 lb 0.758 Kg
Seal Type	Molded Shroud

Dimensions

Shaft Height H	33.34 mm 1.313 in
Total Length L	139.70 mm 5.500 in
Total Width A	1.406 in 35.7 mm
Bolt Hole Spacing J	104.8 mm 4.126 in
Bolt Hole Width N	11.1 mm 0.437 in
Bolt Hole Length N1	20.6 mm 0.811 in
Base Height H1	11.9 mm 0.469 in
Total Height H2	68.3 mm 2.689 in
Dimension L1	46.6 mm 1.835 in
Inside Ring Width B	N/A
Center of Bearing from End S	7.6 mm 0.299 in

Basic Load Ratings

Static Load Rating	1700 lbf 7700 N
Dynamic Load Rating	3600 lbf 15800 N

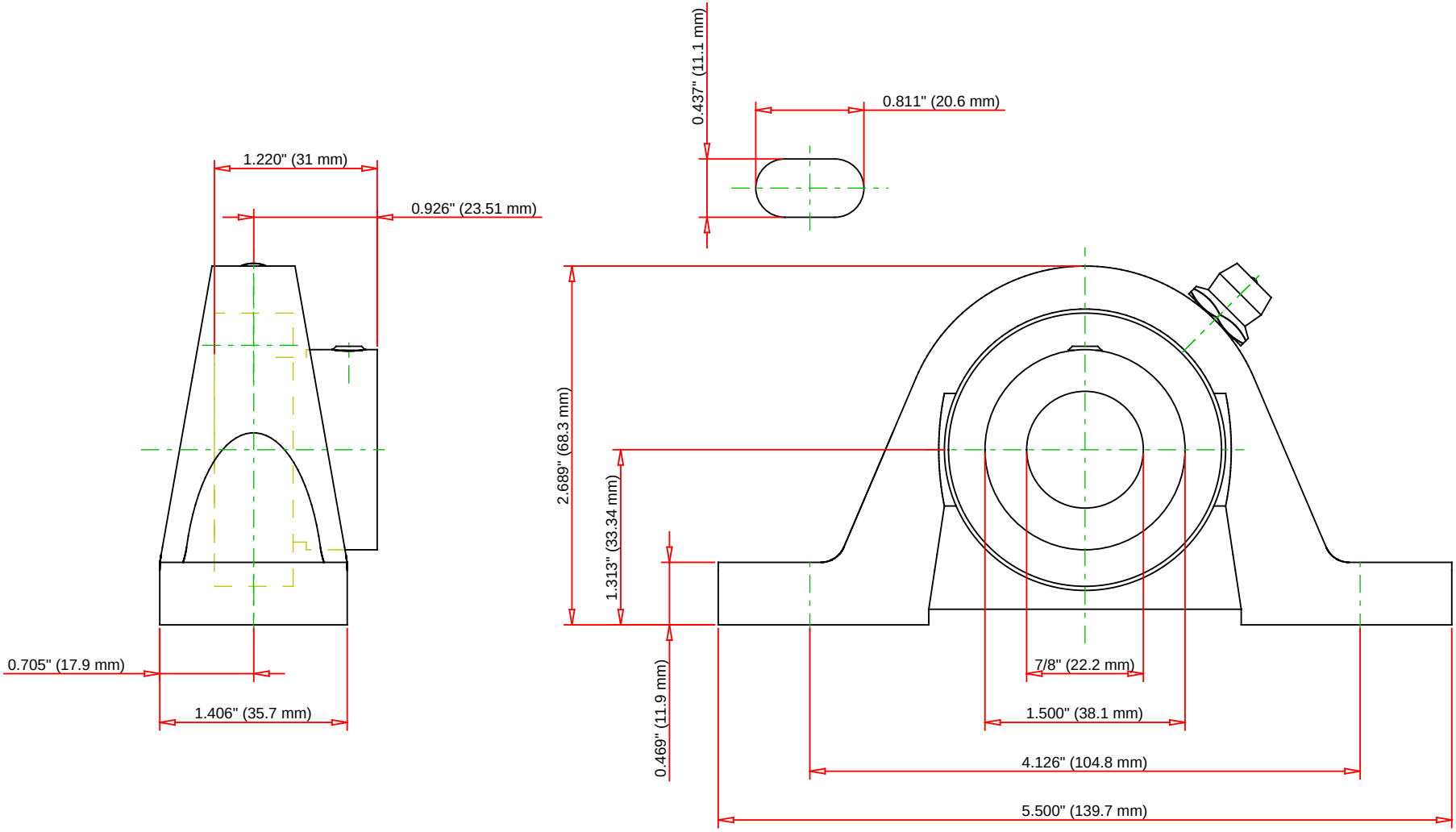

Bearing Number	GRA014RRB				
Load Ratings - C_r	3550	lbf	15800	N	
Load Ratings - C_{0r}	1730	lbf	7700	N	
Weight	1.671	lb	0.758	kg	

TIMKEN

THE TIMKEN COMPANY
NORTH CANTON, OHIO USA

VAK 7/8

Pillow Block Units Eccentric Locking Collar
(Includes Industrial and Standard Series)

Every reasonable effort has been made to ensure the accuracy of the information contained in this writing, but no liability is accepted for errors, omissions or for any other reason.

FOR DISCUSSION ONLY