The Timken Company
4500 Mt Pleasant St. NW
N. Canton, OH 44720
Phone: (234) 262-3000
E-Mail: CustomerCAD@timken.com • **Web site:** www.timken.com

Timken Part Number AN 24-W 24, Inch Accessories - Locknut and Lockwasher

- The chart below shows dimensions for locknuts and lockwashers used in the mounting of straight bore bearings on shafts.
- Other dimensions and tolerances related to shaft configurations are also shown.
- Dimensions are presented according to bearing bore size and are applicable to bearings in the various series (e.g., 222 and 223 etc.).

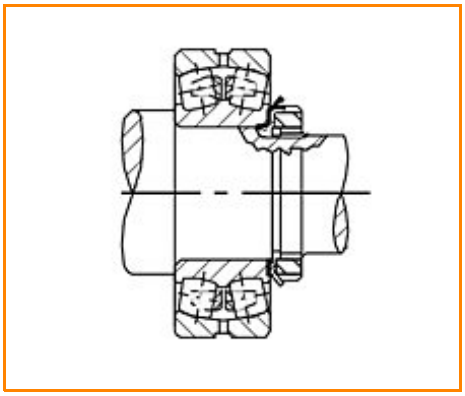

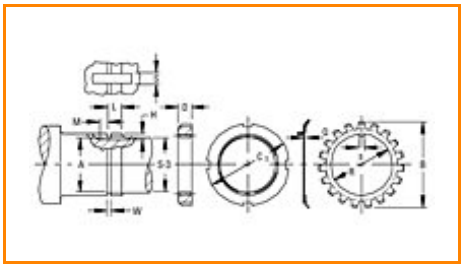

Specifications | Threads | Shaft | Locknut | Lockwasher

Specifications

Bearing Bore	120 mm
Threads No. per Inch	12
Locknut	AN 24
Lockwasher	W 24

Threads

Max. Major Diameter	119.79 mm 4.716 in

Min. Major Diameter	119.50 mm 4.7048 in
Max. Pitch Diameter	118.41 mm 4.6619 in
Min. Pitch Diameter	118.20 mm 4.6536 in
Minor Diameter	117.19 mm 4.6138 in

Shaft

Relief Diameter A	116.40 mm 4.5825 in
Diameter S-3	115.89 mm 4 9/16 in
W[1]	4.0 mm 5/32 in
L[2]	23.80 mm 0.9375 in
H[3]	4.8 mm 3/16 in
S[4]	9.0 mm 9.5 mm 0.353 in 3/8 in
M[5]	7.90 mm 5/16 in

Locknut

C_1	155.60 mm 6 1/8 in

D	20.90 mm 0.8230 in

Lockwasher

Q	3.20 mm 0.125 in
R	122.7 mm 4.831 in
B	164.30 mm 6 15/32 in

[1] Tolerance -0 to + 0.4 mm (-0 to +1/64 in)
[2] Tolerance -0 to + 0.4 mm (-0 to +1/64 in)
[3] Tolerance -0 to + 0.4 mm (-0 to +1/64 in)
[4] Tolerance -0 to + 0.4 mm (-0 to +1/64 in)
[5] Tolerance -0 to + 0.4 mm (-0 to +1/64 in)