The Timken Company
4500 Mt Pleasant St. NW
N. Canton, OH 44720
Phone: (234) 262-3000
E-Mail: CustomerCAD@timken.com • **Web site:** www.timken.com

Timken Part Number N 07-W 07, Inch Accessories - Locknut and Lockwasher

- The chart below shows dimensions for locknuts and lockwashers used in the mounting of straight bore bearings on shafts.
- Other dimensions and tolerances related to shaft configurations are also shown.
- Dimensions are presented according to bearing bore size and are applicable to bearings in the various series (e.g., 222 and 223 etc.).

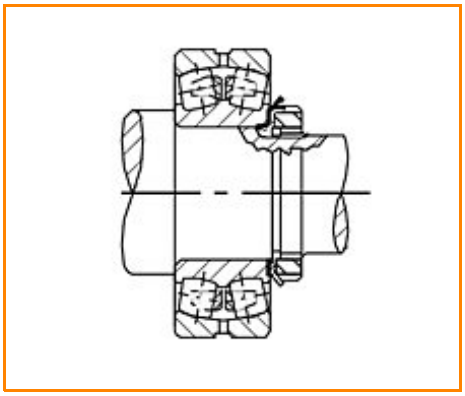

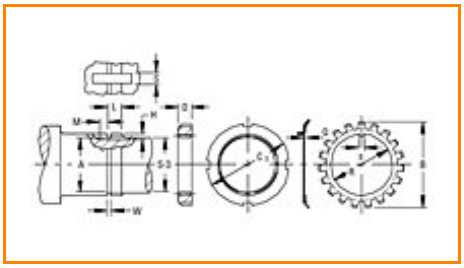

Specifications | Threads | Shaft | Locknut | Lockwasher

Specifications

Bearing Bore	35 mm
Threads No. per Inch	18
Locknut	N 07
Lockwasher	W 07

Threads

Max. Major Diameter	34.95 mm 1.376 in

Min. Major Diameter	34.74 mm 1.3678 in
Max. Pitch Diameter	34.03 mm 1.3399 in
Min. Pitch Diameter	33.93 mm 1.3359 in
Minor Diameter	33.22 mm 1.3078 in

Shaft

Relief Diameter A	32.82 mm 1.2922 in
Diameter S-3	31.75 mm 1 1/4 in
W[1]	2.4 mm 3/32 in
L[2]	12.70 mm 0.5000 in
H[3]	2.4 mm 3/32 in
S[4]	4.5 mm 4.8 mm 0.176 in 3/16 in
M[5]	3.20 mm 1/8 in

Locknut

C_1	52.39 mm 2 1/16 in

D	11.40 mm 0.4480 in

Lockwasher

Q	1.30 mm 0.050 in
R	36.0 mm 1.416 in
B	57.20 mm 2 1/4 in

[1] Tolerance -0 to + 0.4 mm (-0 to +1/64 in)
[2] Tolerance -0 to + 0.4 mm (-0 to +1/64 in)
[3] Tolerance -0 to + 0.4 mm (-0 to +1/64 in)
[4] Tolerance -0 to + 0.4 mm (-0 to +1/64 in)
[5] Tolerance -0 to + 0.4 mm (-0 to +1/64 in)