The Timken Company
4500 Mt Pleasant St. NW
N. Canton, OH 44720
Phone: (234) 262-3000
E-Mail: CustomerCAD@timken.com • **Web site:** www.timken.com

Timken Part Number LL641149 - LL641110, Tapered Roller Bearings - TS (Tapered Single) Imperial

This is the most basic and most widely used type of tapered roller bearing. It consists of two main separable parts: the cone (inner ring) assembly and the cup (outer ring). It is typically mounted in opposing pairs on a shaft.



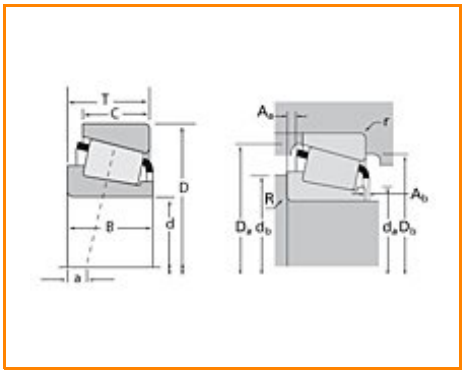

Specifications | Dimensions | Abutment and Fillet Dimensions | Basic Load Ratings | Factors

Specifications

Series	LL641100
Cone Part Number	LL641149
Cup Part Number	LL641110
Design Units	Imperial
Bearing Weight	3.500 Kg 7.70 lb
Cage Type	Stamped Steel

Dimensions

d - Bore	203.2 mm 8 in
D - Cup Outer Diameter	261.142 mm 10.2812 in
B - Cone Width	27.783 mm 1.0938 in
C - Cup Width	21.433 mm 0.8438 in
T - Bearing Width	28.575 mm 1.1250 in

Abutment and Fillet Dimensions

R - Cone Backface "To Clear" Radius[1]	1.520 mm 0.06 in
r - Cup Backface "To Clear" Radius[2]	1.52 mm 0.06 in
da - Cone Frontface Backing Diameter	212.09 mm 9.32 in
db - Cone Backface Backing Diameter	214.12 mm 8.43 in
Da - Cup Frontface Backing Diameter	254.51 mm 10.02 in
Db - Cup Backface Backing Diameter	248.92 mm 9.80 in
Ab - Cage-Cone Frontface Clearance	2.5 mm 0.1 in
Aa - Cage-Cone Backface Clearance	2.5 mm 0.1 in
a - Effective Center Location[3]	15.70 mm 0.62 in

Basic Load Ratings

C90 - Dynamic Radial Rating (90 million revolutions)[4]	53900 N 12100 lbf
C1 - Dynamic Radial Rating (1 million revolutions)[5]	208000 N 46700 lbf
C0 - Static Radial Rating	405000 N 91100 lbf
C_{a90} - Dynamic Thrust Rating (90 million revolutions)[6]	37700 N 8480 lbf

Factors

K - Factor[7]	1.43
e - ISO Factor[8]	0.41
Y - ISO Factor[9]	1.47
G1 - Heat Generation Factor (Roller-Raceway)	522
G2 - Heat Generation Factor (Rib-Roller End)	231
Cg - Geometry Factor	0.14

[1] These maximum fillet radii will be cleared by the bearing corners.

[2] These maximum fillet radii will be cleared by the bearing corners.

[3] Negative value indicates effective center inside cone backface.

[4] Based on 90 x 10^6 revolutions L_{10} life, for The Timken Company life calculation method. C_{90} and C_{a90} are radial and thrust values.

[5] Based on 1 x 10^6 revolutions L_{10} life, for the ISO life calculation method.

[6] Based on 90 x 10^6 revolutions L_{10} life, for The Timken Company life calculation method. C_{90} and C_{a90} are radial and thrust values for a single-row, $C_{90(2)}$ is the two-row radial value.

[7] These factors apply for both inch and metric calculations. Consult your Timken representative for instruction on use.

[8] These factors apply for both inch and metric calculations. Consult your Timken representative for instruction

on use.

[9] These factors apply for both inch and metric calculations. Consult your Timken representative for instruction on use.

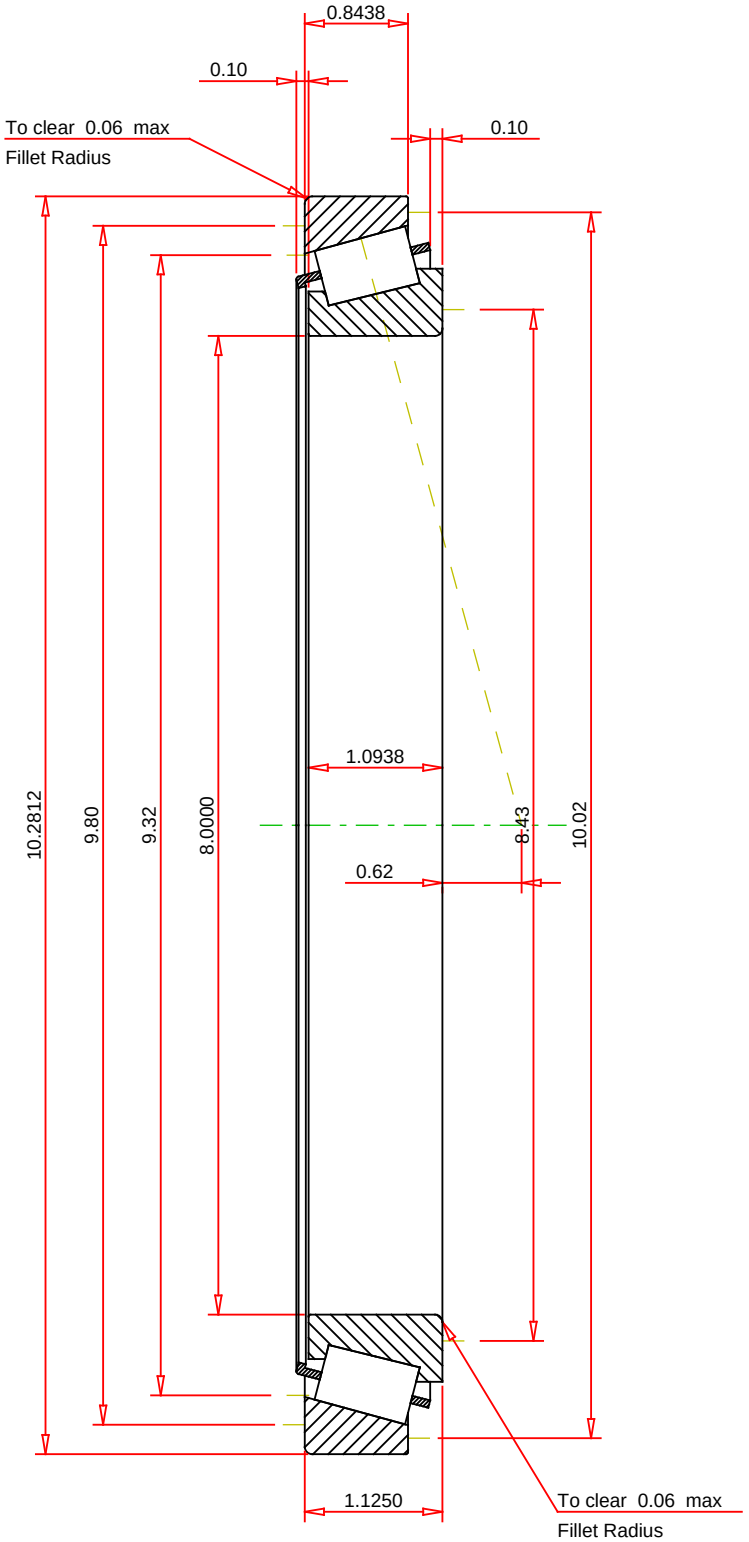

IMPERIAL UNITS

ISO Factor - e	0.41	
ISO Factor - Y	1.47	
Bearing Weight	7.7	lb
Number of Rollers Per Row	47	
Effective Center Location	0.62	inch

TIMKEN

THE TIMKEN COMPANY
NORTH CANTON, OHIO USA

LL641149 - LL641110
TS BEARING ASSEMBLY

K Factor	1.43	
Dynamic Radial Rating - C90	53900	lbf
Dynamic Thrust Rating - Ca90	37700	lbf
Static Radial Rating - C0	405000	lbf
Dynamic Radial Rating - C1	208000	lbf

Every reasonable effort has been made to ensure the accuracy of the information contained in this writing, but no liability is accepted for errors, omissions or for any other reason.

FOR DISCUSSION ONLY