The Timken Company
4500 Mt Pleasant St. NW
N. Canton, OH 44720
Phone: (234) 262-3000
E-Mail: CustomerCAD@timken.com • **Web site:** www.timken.com

Timken Part Number KM 13, Metric Locknut

No. KM00 - KM40 also available for 304 stainless steel.

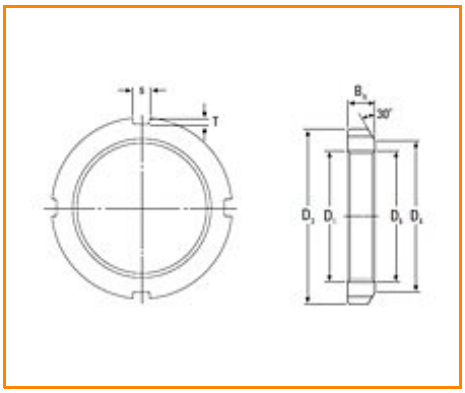

Specifications

Thread D_1[1]	M65x2.0
D_3	85 mm
D_4	79 mm
B_n	12 mm
s	7.0 mm
T	3.0 mm
D_6	66.0 mm
Lockwasher	MB 13
Assembly Weight	0.203 Kg

[1] Means metric thread and the digits are major diameter of thread and pitch.
Trmeans 30º; trapezoid thread and the digits are major diameter of thread and pitch.