The Timken Company
4500 Mt Pleasant St. NW
N. Canton, OH 44720
Phone: (234) 262-3000
E-Mail: CustomerCAD@timken.com • **Web site:** www.timken.com

Part Number GYE60KRRB SGT, Fafnir® Wide Inner Ring Setscrew Locking Ball Bearings



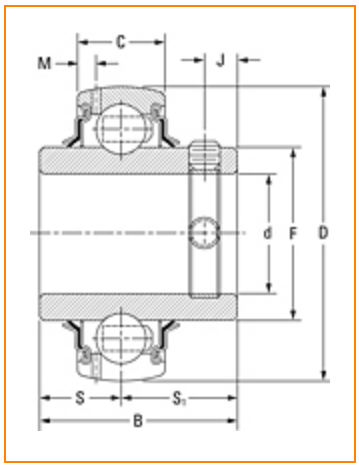

Specifications | Dimensions | Basic Load Ratings

Specifications

Shaft Size d	2.362 in 60 mm
Bore Type	Cylindrical bore
Bearing Type	Ball Bearing
Material	Bearing Steel
Lubrication Type	Relubricatable
O.D. Type	Spherical OD
Dimension M	0.202 in 5.13 mm
Series	Industrial
Weight	0.50 lb 0.2 Kg

Sub Series	GYE..KRRB SGT
Alternate Part Name	GYE60KRRBSGT
Seal Type	Shroud Seal

Dimensions

Outside Diameter D	4.331 in 110.000 mm
Inner Ring Width B	65.07 mm 2.562 in
Outside Ring Width C	27.000 mm 1.063 in
Radius r	0.6 mm 0.024 in
Center of Bearing from End S	25.4 mm 1.000 in
Dimension S1	39.67 mm 1.562 in
Set Screw Distance S2	10.00 mm 0.394 in
Set Screw Size	M10x1.5
Number of Set Screws	2
Angle between Set Screws	90 °

Basic Load Ratings

Static Load Rating	8080 lbf 35900 N
Dynamic Load Rating	13100 lbf 58200 N

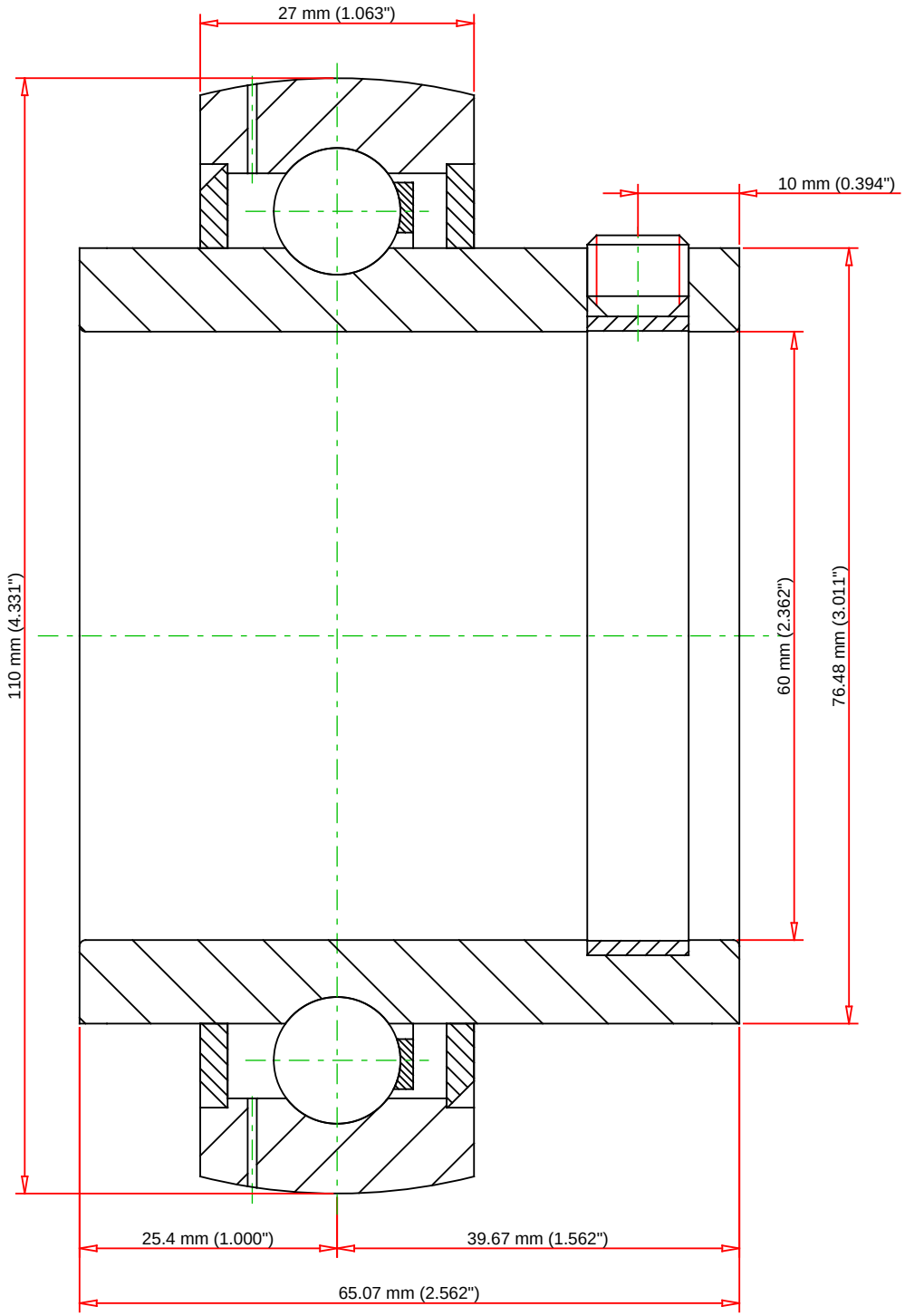

Weight	0.5 lb	0.2 kg

TIMKEN®

THE TIMKEN COMPANY
NORTH CANTON, OHIO USA

GYE60KRRB SGT

Fafnir® Wide Inner Ring Setscrew Locking Ball Bearings

Basic Load Ratings - C_r	13200 lbf	58500 N
Load Ratings - C_{0r}	8000 lbf	35600 N

Every reasonable effort has been made to ensure the accuracy of the information contained in this writing, but no liability is accepted for errors, omissions or for any other reason.

FOR DISCUSSION ONLY