The Timken Company
4500 Mt Pleasant St. NW
N. Canton, OH 44720
Phone: (234) 262-3000
E-Mail: CustomerCAD@timken.com • **Web site:** www.timken.com

Timken Part Number YCJ2 15/16, Four-Bolt Flanged Units Setscrew Locking (Includes Industrial and Standard Series)



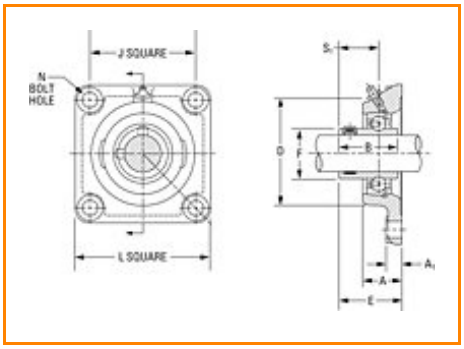

Specifications | Dimensions | Basic Load Ratings

Specifications

Bore Size d	2 15/16 in 74.6 mm
Bearing Number	GY1215KRRB
Dimension D	6.374 in 161.9 mm
Dimension E	3.394 in 86.2 mm
Inside Ring Outside Diameter	3.619 in 91.92 mm
Series	Industrial
Weight	17.48 lb 7.93 Kg

Seal Type	Shroud Seal

Dimensions

Total Length L	196.8 mm 7.748 in
Total Width A	2.626 in 66.7 mm
Bolt Hole Size N	20 mm 0.787 in
Flange Thickness A1	23.8 mm 0.937 in
Center of Bearing from Housing End A2	41.8 mm 1.646 in
Inside Ring Width B	N/A
Total Height	196.8 mm 7.748 in
Bolt Size	M20
Center of Bearing from Bearing End S	33.4 mm 1.315 in

Basic Load Ratings

Static Load Rating	9800 lbf 43600 N
Dynamic Load Rating	15600 lbf 69500 N

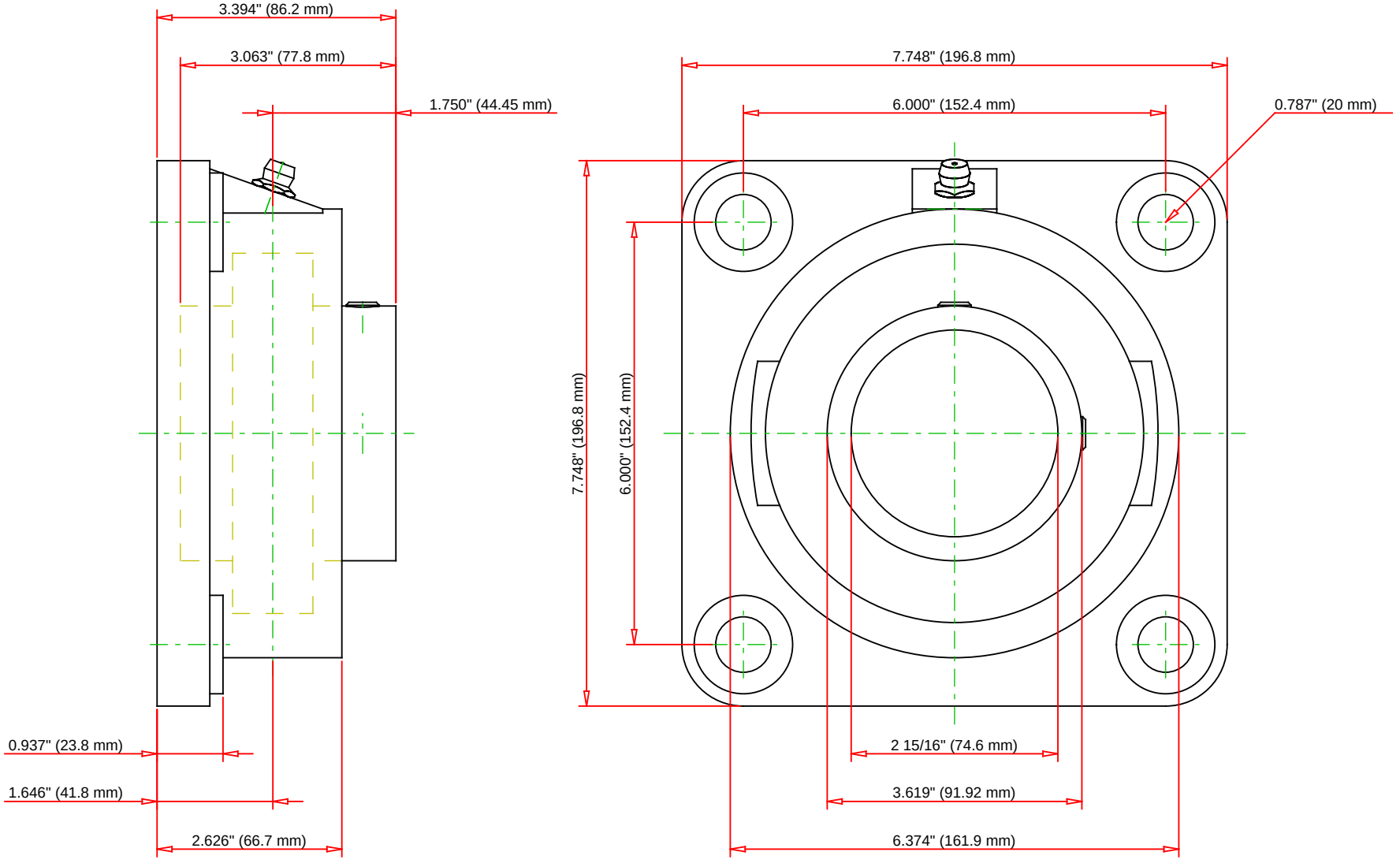

Bearing Number	GY1215KRRB			
Load Ratings - C_r	15600	lbf	69500	N
Load Ratings - C_{0r}	9800	lbf	43600	N
Weight	0	lb	0	kg
Bolt Size	M12x1.75			

TIMKEN

THE TIMKEN COMPANY
NORTH CANTON, OHIO USA

YCJ2 15/16

Four-Bolt Flanged Units Setscrew Locking
(Includes Industrial and Standard Series)

Every reasonable effort has been made to ensure the accuracy of the information contained in this writing, but no liability is accepted for errors, omissions or for any other reason.

FOR DISCUSSION ONLY