The Timken Company
4500 Mt Pleasant St. NW
N. Canton, OH 44720
Phone: (234) 262-3000
E-Mail: CustomerCAD@timken.com • **Web site:** www.timken.com

Timken Part Number LM67048 - LM67010, Tapered Roller Bearings - TS (Tapered Single) Imperial

This is the most basic and most widely used type of tapered roller bearing. It consists of two main separable parts: the cone (inner ring) assembly and the cup (outer ring). It is typically mounted in opposing pairs on a shaft.



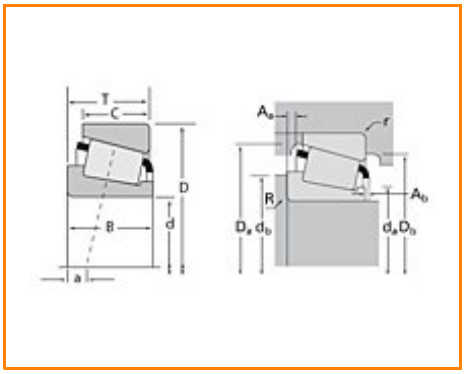

Specifications | Dimensions | Abutment and Fillet Dimensions | Basic Load Ratings | Factors

Specifications

Series	LM67000
Cone Part Number	LM67048
Cup Part Number	LM67010
Design Units	Imperial
Bearing Weight	0.200 Kg 0.4 lb
Cage Type	Stamped Steel

Dimensions

d - Bore	31.750 mm 1.2500 in
D - Cup Outer Diameter	59.131 mm 2.3280 in
B - Cone Width	16.764 mm 0.6600 in
C - Cup Width	11.811 mm 0.4650 in
T - Bearing Width	15.875 mm 0.6250 in

Abutment and Fillet Dimensions

R - Cone Backface "To Clear" Radius[1]	3.560 mm 0.14 in
r - Cup Backface "To Clear" Radius[2]	1.27 mm 0.050 in
da - Cone Frontface Backing Diameter	36.07 mm 1.42 in
db - Cone Backface Backing Diameter	42.42 mm 1.67 in
Da - Cup Frontface Backing Diameter	55.90 mm 2.24 in
Db - Cup Backface Backing Diameter	52.07 mm 2.05 in
Ab - Cage-Cone Frontface Clearance	1.3 mm 0.05 in
Aa - Cage-Cone Backface Clearance	0.3 mm 0.01 in
a - Effective Center Location[3]	-3 mm -0.12 in

Basic Load Ratings

C90 - Dynamic Radial Rating (90 million revolutions)[4]	12100 N 2720 lbf
C1 - Dynamic Radial Rating (1 million revolutions)[5]	46700 N 10500 lbf
C0 - Static Radial Rating	44600 N 10000 lbf
C_{a90} - Dynamic Thrust Rating (90 million revolutions)[6]	8550 N 1920 lbf

Factors

K - Factor[7]	1.42
e - ISO Factor[8]	0.41
Y - ISO Factor[9]	1.46
G1 - Heat Generation Factor (Roller-Raceway)	12.8
G2 - Heat Generation Factor (Rib-Roller End)	9.93
Cg - Geometry Factor	0.0612

[1] These maximum fillet radii will be cleared by the bearing corners.

[2] These maximum fillet radii will be cleared by the bearing corners.

[3] Negative value indicates effective center inside cone backface.

[4] Based on 90 x 10^6 revolutions L_{10} life, for The Timken Company life calculation method. C_{90} and C_{a90} are radial and thrust values.

[5] Based on 1 x 10^6 revolutions L_{10} life, for the ISO life calculation method.

[6] Based on 90 x 10^6 revolutions L_{10} life, for The Timken Company life calculation method. C_{90} and C_{a90} are radial and thrust values for a single-row, $C_{90(2)}$ is the two-row radial value.

[7] These factors apply for both inch and metric calculations. Consult your Timken representative for instruction on use.

[8] These factors apply for both inch and metric calculations. Consult your Timken representative for instruction

on use.

[9] These factors apply for both inch and metric calculations. Consult your Timken representative for instruction on use.

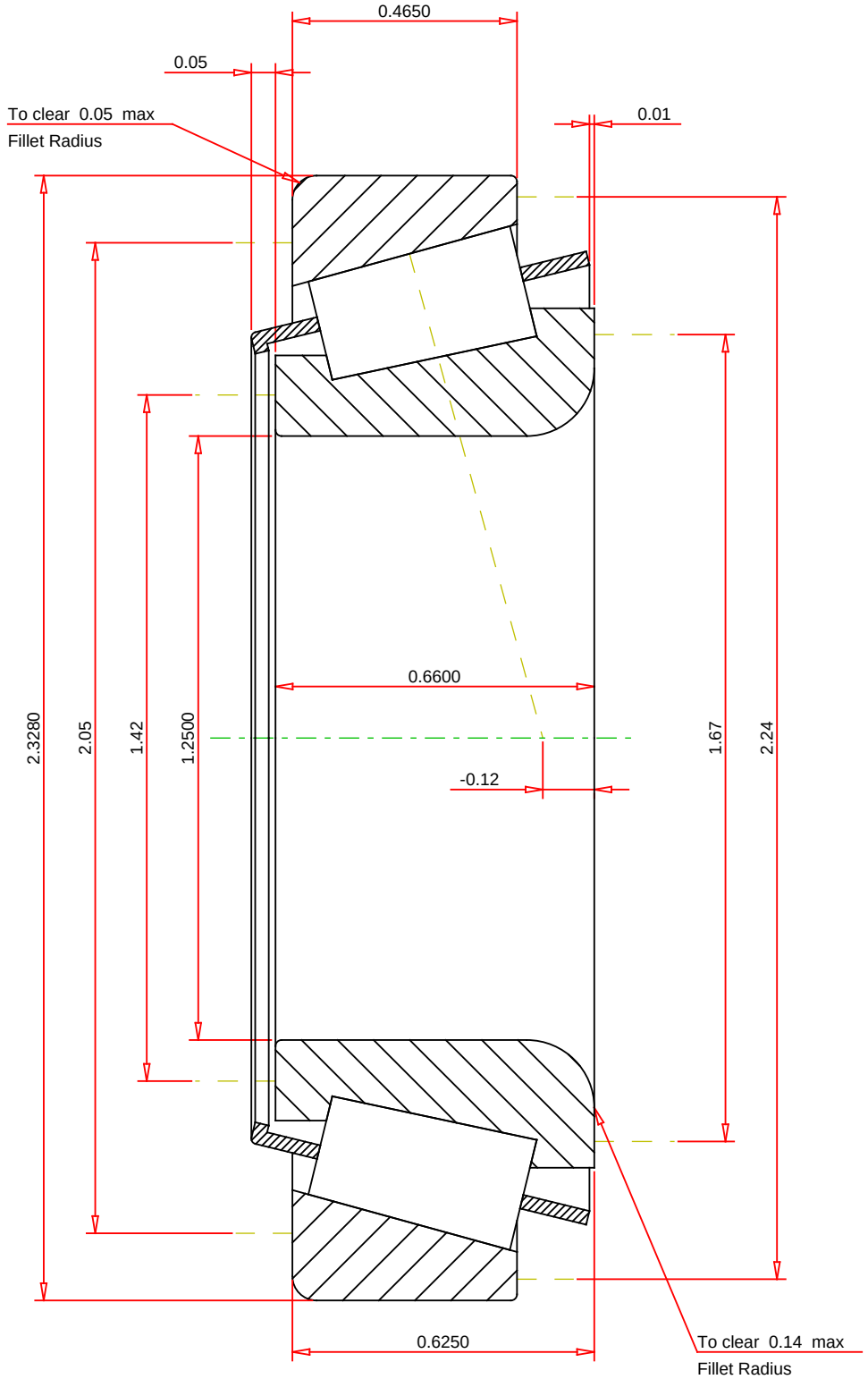

IMPERIAL UNITS

ISO Factor - e	0.41	
ISO Factor - Y	1.46	
Bearing Weight	0.4	lb
Number of Rollers Per Row	19	
Effective Center Location	-0.12	inch

TIMKEN

THE TIMKEN COMPANY
NORTH CANTON, OHIO USA

LM67048 - LM67010
TS BEARING ASSEMBLY

K Factor	1.42	
Dynamic Radial Rating - C90	12100	lbf
Dynamic Thrust Rating - Ca90	8550	lbf
Static Radial Rating - C0	44600	lbf
Dynamic Radial Rating - C1	46700	lbf

Every reasonable effort has been made to ensure the accuracy of the information contained in this writing, but no liability is accepted for errors, omissions or for any other reason.

FOR DISCUSSION ONLY